MF095380

UNIT ~~2349~~

State Lease	Control	Base File	County
MF095380	56-029973		BRAZOS

TERMINATION

DATE 9/23/21

LEASING SSD

MAPS

GIS MC

Survey	HIGHWAYS & PUBLIC TRANSPORTATION DE
Block	
Block Name	
Township	
Section/Tract	
Land Part	
Part Description	HIGHWAY RIGHT-OF-WAY
Acres	1.9
Depth Below	0
Depth Above	0
Depth Other	See Lease
Name	SENECA RESOURCES CORPORATION
Lease Date	11/2/1993
Primary Term	1 yrs
Bonus ($)	$375.00
Rental ($)	$0.00
Lease Royalty	0.1875

Leasing:

Analyst:

Maps:

GIS: MC

~~#2918~~ #2349

1.9 UNIT ACRES

STATE LEASE - HROW M-95380

COUNTY (CODE)	BRAZOS (21)
SURVEY	J.M. BARRERA A-68
BLOCK	N/A
TOWNSHIP	N/A
SECTION (S)	N/A
PART	ST. HWY. 6
ACRES	~~3~~ 1.9 per unit agreement & title opinion
DEPTH LIMITS	N/A
BASE FILE (S)	N/A
CONTROL NO. (S)	56-02997-3
CONTROL NO. (S)	N/A

LESSEE	SENECA RESOURCES CORP.
DATE	11-02-93
PRIMARY TERM	ONE (1) YEAR
BONUS ($)	375.00 (125.00 PER AC.)
ROYALTY	3/16
RENTAL ($)	N/A
VARIABLE ROYALTY	N/A

RENTALS	
LEASE ADMIN.	
MINERAL MAPS	

3

CONTENTS OF FILE NO. M-95380

HROW

1. Lease (2)	11.2.93	
2. Memo	10.27.93	
3. Worksheet	—	
4. Ltr from Seneca	8.10.93	
5. Plat	—	
6. Waiver	8.9.93	
7. Aff. of Consideration	"	
8. Aff. of Purpose (Hor. Well)	8.10.93	
9. Title opinion	8.6.93	
10. Adjacent Lease's	—	
11. Ltr. from Seneca	2.4.94	
12. FAX from Seneca (Re-Survey Acres / PLAT	5/8/95	
13. Ltr. f. Seneca: Oil & Gas Lease M95380: Barrera No. 2 Well Field notes PLAT: Division Orders Title Opinion: Ownership Interests	8-8-94	
14. Ltr. to Rosewood (PO)	3/2/97	
15. Well Reports	9/19/00	
16. Pooling Agreement + Unit Designation.	1/28/94	
scanned	2-6-2018	
see #30 M-095228 shut in payment Unit 2349	4/18/19	
scanned	5-8-2019	
17. Unit 2349 Termination	4/12/22	
Scanned SM	04/28/2022	

GLO-S-08-(1-82)

HROW Lease
Revised 10/89

The State of Texas

Austin, Texas

PAID-UP

OIL AND GAS LEASE NO. M-95380
GENERAL LAND OFFICE
AUSTIN, TEXAS

THIS AGREEMENT made and entered into by and between the Commissioner of the General Land Office of the State of Texas, whose address is Stephen F. Austin Building, 1700 North Congress, Austin, Texas, 78701, hereinafter called "Lessor", hereunto authorized by the School Land Board, pursuant to the provisions of Chapters 32, 34 and 52 of the Natural Resources Code (hereinafter called N.R.C.), and amendments thereto, and all applicable rules promulgated by the School Land Board, and Seneca Resources Corporation, whose address is 333 Clay St., Suite 4150, Houston, Texas 77002, hereinafter called "Lessee".

1. Lessor, in consideration of Three Hundred Seventy Five and 00/100 Dollars ($375.00), receipt of which is hereby acknowledged, and of the covenants and agreements of Lessee hereinafter contained, does hereby grant, lease, and let unto Lessee the land covered hereby for the purposes and with the exclusive right of exploring, drilling, mining and operating for, producing and owning oil, gas, and all other hydrocarbons, produced from the land covered hereby. The land covered hereby, herein called "said land" is located in the County of Brazos, State of Texas, and is described as follows:

3 acres of land, more or less, situated in said Brazos County, Texas, more particularly described in Exhibit "A"

attached hereto and made a part hereof together with a plat, attached hereto as Exhibit "B", depicting said right-of-way and surrounding area for purposes of illustration only.

For the purpose of determining the amount of any bonus or other payment hereunder, said land shall be deemed to contain 3 acres, whether actually containing more or less, and the above recital of acreage shall be deemed to be the true acreage thereof. Lessor accepts the bonus as lump sum consideration for this lease and all rights and options hereunder.

2. PRIMARY TERM: This lease, which is a "paid up" lease requiring no rentals, shall remain in force for a term of one (1) year from November 2, 1993, hereinafter called "primary term", and as long thereafter as operations, as hereinafter defined, are conducted upon said land with no cessation for more than ninety (90) consecutive days.

3. ROYALTIES: As royalty Lessee covenants and agrees:

(a) To deliver to the credit of Lessor, in the pipe line to which Lessee may connect its well, the equal three sixteenth (3\16) part of all oil produced and saved by Lessee from said land, or from time to time, at the option of Lessee, to pay Lessor the average posted market price of such three sixteenth (3\16) part of such oil at the wells as of the day it is run to the pipe line or storage tanks, Lessor's interest, in either case, to bear none of the cost of treating oil to render it marketable pipe line oil;

(b) To pay Lessor on gas and casinghead gas produced from said land (1) when sold by lessee, three sixteenth (3\16) of the amount realized by Lessee, computed at the mouth of the well, or (2) when used by Lessee off said land or in the manufacture of gasoline or other products, the market value, at the mouth of the well, of three sixteenth (3\16) of such gas and casinghead gas.

(c) If, at the expiration of the primary term or at any time or times thereafter, there is any well on said land or on lands with which said land or any portion thereof has been pooled, capable of producing oil or gas, and all such wells are shut-in, this lease shall, nevertheless, continue in force as though operations were being conducted on said land for so long as said wells are shut-in, and thereafter this lease may be continued in force as if no shut-in had occurred.

(d) Lessee covenants and agrees to use reasonable diligence to produce, utilize, or market the minerals capable of being produced from said wells, but in the exercise of such diligence, Lessee shall not be obligated to install or furnish facilities other than well facilities and ordinary lease facilities of flow lines, separator, and lease tank, and shall not be required to settle

labor trouble or to market gas upon terms unacceptable to Lessee.

(e) If at any time or times after the expiration of the primary term, all such wells are shut-in for a period of ninety consecutive days, and during such time there are no operations on said land, then at or before the expiration of said ninety day period, lessee shall pay or tender, by check of lessee, as royalty, the sum of $6.00. Lessee shall make like payments or tenders at or before the end of each anniversary of the expiration of said ninety day period if upon such anniversary this lease is being continued in force solely by reason of the provisions of this paragraph. Each such payment or tender shall be made to the parties who at the time of payment would be entitled to receive the royalties which would be paid under this lease if the wells were producing. Nothing herein shall impair lessee's right to release as provided in paragraph 5 hereof. In the event of assignment of this lease in whole or in part, liability for payment hereunder shall rest exclusively on the then owner or owners of this lease, severally as to acreage owned by each.

(f) All royalties not taken in kind shall be paid to the Commissioner of the General Land Office at Austin, Texas, in the following manner:

Royalty on oil is due and must be received in the General Land Office on or before the 5th day of the second month succeeding the month of production, and royalty on gas is due and must be received in the General Land Office on or before the 15th day of the second month succeeding the month of production, accompanied by the affidavit of the owner, manager, or other authorized agent, completed in the form and manner prescribed by the General Land Office and showing the gross amount and disposition of all oil and gas produced and the market value of the oil and gas, together with a copy of all documents, records or reports confirming the gross production, disposition and market value including gas meter readings, pipeline receipts, gas line receipts and other checks or memoranda of amount produced and put into pipelines, tanks, or pools and gas lines or gas storage, and any other reports or records which the General Land Office may require to verify the gross production, disposition and market value. In all cases the authority of a manager or agent to act for the Lessee herein must be filed in the General Land Office. Each royalty payment shall be accompanied by a check stub, schedule, summary or other remittance advice showing by the assigned General Land Office lease number the amount of royalty being paid on each lease. If Lessee pays his royalty on or before thirty (30) days after the royalty payment was due, the Lessee owes a penalty of 5% on the royalty or $25.00, whichever is greater. A royalty payment which is over thirty (30) days late shall accrue a penalty of 10% of the royalty due or $25.00, whichever is greater. In addition to a penalty, royalties shall accrue interest at a rate of 12% per year; such interest will begin accruing when the royalty is sixty (60) days overdue.

Affidavits and supporting documents which are not filed when due shall incur a penalty in an amount set by the General Land Office administrative rule which is effective on the date when the affidavits or supporting documents were due. The Lessee shall bear all responsibility for paying or causing royalties to be paid as prescribed by the due date provided herein. Payment of the delinquency penalty shall in no way operate to prohibit the State's right of forfeiture as provided by law nor act to postpone the date on which royalties were originally due. The above penalty provisions shall not apply in cases of title dispute as to the State's portion of the royalty or to that portion of the royalty in dispute as to fair market value. The State shall have first lien upon all oil and gas produced from the area covered by this lease to secure the payment of all unpaid royalty and other sums of money that may become due to the State hereunder.

4. POOLING: (a) Lessee is hereby granted the right, at its option, to pool or unitize any land covered by this lease with any other land covered by this lease, and/or with any other land, lease, or leases, as to any or all minerals or horizons. Units pooled for oil hereunder shall not exceed 160 acres each in area, and units pooled for gas hereunder shall not exceed in area 640 acres each plus a tolerance of ten percent (10%) thereof, unless oil or gas units of a greater size are allowed under or prescribed by rules of the Railroad Commission of Texas. A unit established hereunder shall be valid and effective for all purposes of this lease even though there may be mineral, royalty, or leasehold interests in lands within the unit which are not effectively pooled or unitized. Any operations conducted on any part of such unitized land shall be considered, for all purposes, except the payment of royalty, as operations conducted upon said land under this lease. There shall be allocated to the land covered by this lease within each such unit (or to each separate tract within the unit if this lease covers separate tracts within the unit) the proportion of the total production of unitized minerals from the unit, after deducting any used in lease or unit operations, which the number of surface acres in such land (or in each such separate tract) covered by this lease within the unit bears to the total number of surface acres in the unit, and the production so allocated shall be considered for all purposes, including payment or delivery of royalty, overriding royalty and any other payments out of production, to be the entire production of unitized minerals from the land to which allocated in the same manner as though produced therefrom under the terms of this lease. The owner of the reversionary estate of any term royalty or mineral estate agrees that the accrual of royalties pursuant to this paragraph or of shut-in royalties from a well on the unit shall satisfy any limitation of term requiring production of oil or gas. The formation of any unit hereunder which includes land not covered by this lease shall not have the effect of exchanging or transferring any interest under this lease (including, without limitation, any shut-in royalty which may become payable under this lease) between

parties owning interests in land covered by this lease and parties owning interests in land not covered by this lease. Neither shall it impair the right of Lessee to release as provided in paragraph 5 hereof, except that Lessee may not so release as to lands within a unit while there are operations thereon for unitized minerals unless all pooled leases are released as to lands within the unit. At any time while this lease is in force Lessee may dissolve any unit established hereunder by filing for record in the public office where this lease is recorded a declaration to that effect, if at that time no operations are being conducted thereon for unitized minerals. Subject to the provisions of this paragraph 4, a unit once established hereunder shall remain in force for so long as any lease subject thereto shall remain in force. If this lease now or hereafter covers separate tracts, no pooling or unitization of royalty interests as between any such separate tracts is intended or shall be implied or result merely from the inclusion of such separate tracts within this lease but Lessee shall nevertheless have the right to pool or unitize as provided in this paragraph 4 with consequent allocation of production as herein provided. As used in this paragraph 4, the words "separate tract" mean any tract with royalty ownership differing, now or hereafter, either as to parties or amounts, from that as to any other part of the leased premises.

(b) Neither unit production of oil or gas, nor unit operations, nor payment of shut-in royalties from a unit gas well, shall serve to hold the lease in force as to any area outside the unit, regardless of whether the production, maintenance of a shut-in gas well, or operations are actually located on the State tract or not.

(c) Lessee agrees to file with the General Land Office a copy of any unit designation which this lease is included within ninety (90) days of such designation.

5. RELEASE: Lessee may relinquish the rights granted hereunder to the State at any time by recording the relinquishment in the county where this area is situated and filing the recorded relinquishment or certified copy of same in the General Land Office within ninety (90) days after its execution accompanied by the prescribed filing fee. Such relinquishment will not have the effect of releasing Lessee from any liability theretofore accrued in favor of the State.

6. REWORK: If at any time or times during the primary term operations are conducted on said land and if all operations are discontinued, this lease shall thereafter terminate at the end of the primary term or on the ninetieth day after discontinuance of all operations, whichever is the later date, unless on such later date either (1) Lessee is conducting operations or (2) the shut-in well provisions of paragraph 3 or the provisions of paragraph 9 are applicable. Whenever used in this lease the word "operations" shall mean operations for and any of the following: drilling,

testing, completing, reworking, recompleting, deepening, plugging back or repairing of a well in search for or in an endeavor to obtain production of oil or gas, or production of oil or gas in paying quantities.

7. MINERAL USE: Lessee shall have the use, free from royalty, of oil and gas produced from said land in all operations hereunder.

8. NOTICE: In the event Lessor considers that Lessee has not complied with all its obligations hereunder, both express and implied, Lessor shall notify Lessee in writing, setting out specifically in what respects Lessee has breached this contract. Lessee shall then have sixty (60) days after receipt of said notice within which to meet or commence to meet all or any part of the breaches alleged by Lessor. The service of said notice shall be precedent to the bringing of any action by Lessor on said lease for any cause, and no such action shall be brought until the lapse of sixty (60) days after service of such notice on Lessee. Neither the service of said notice nor the doing of any acts by Lessee aimed to meet all or any of the alleged breaches shall be deemed an admission or presumption that Lessee has failed to perform all its obligations hereunder. If this lease is canceled for any cause, it shall nevertheless remain in force and effect as to (1) sufficient acreage around each well as to which there are operations to constitute a drilling or maximum allowable unit under applicable governmental regulations, (but in no event less than forty acres), such acreage to be designated by Lessee as nearly as practicable in the form of a square centered at the well, or in such shape as then existing spacing rules require; and (2) any part of said land included in a pooled unit on which there are operations.

9. FORCE MAJEURE: If, while this lease is in force, at, or after the expiration of the primary term hereof, it is not being continued in force by reason of the shut-in well provisions of paragraph 3 hereof, and Lessee is not conducting operations on said land by reason of (1) any law, order, rule or regulation, (whether or not subsequently determined to be invalid) or (2) any other cause, whether similar or dissimilar, (except financial) beyond the reasonable control of Lessee, the primary term shall be extended until the first anniversary date hereof occurring ninety (90) or more days following the removal of such delaying cause, and this lease may be extended thereafter by operations as if such delay had not occurred.

10. LESSER ESTATE,CLAUSE: If this lease covers a less interest in the oil or gas in all or any part of said land than the entire and undivided fee simple estate (whether lessors interest is herein specified or not), or no interest therein, then the royalties, and other monies accruing from any part as to which this lease covers less than such full interest, shall be paid only in the proportion which the interest therein, if any, covered by this lease bears to the whole and undivided fee simple estate therein.

11. ASSIGNMENTS: This lease may be transferred at any time. All transfers must reference the lease by file number and must be recorded in the county where the land covered hereby is located, and the recorded transfer or a copy certified to by the County Clerk of the county where the transfer is recorded must be filed in the General Land Office within ninety (90) days of the execution date, as provided by N.R.C. Section 52.026, accompanied by the prescribed filing fee. Every transferee shall succeed to all rights and be subject to all obligations, liabilities, and penalties owed to the State by the original Lessee or any prior transferee of the lease, including any liabilities to the State for unpaid royalties.

12. WELL INFORMATION: Lessee agrees to forthwith furnish Lessor, upon written request, with copies of all drilling logs, electrical logs, cores and core records and other information pertaining to all wells drilled by lessee either on the leased premises or acreage pooled therewith, when requested to do so. Said information shall remain confidential as required by statute.

13. SURFACE: Notwithstanding anything herein to the contrary, it is agreed that Lessee will not conduct any exploration or drilling on the surface of the leased premises or use the surface in the exercise of any rights herein granted. Any development of said land shall be by means of a directional well located off the leased premises, or by pooling of said land with other land, lease or leases as hereinabove provided.

14. COMPENSATORY ROYALTY: Lessee shall pay a compensatory royalty if this lease is not being held by production on the leased premises, by production from a pooled unit, or by payment of shut-in royalties in accordance with the terms of this lease, and if oil or gas is sold or delivered in paying quantities from a well located within 2500 feet of the leased premises and completed in a producible reservoir underlying the area leased hereunder or in any case in which drainage is occurring. Such compensatory royalty shall be paid at the royalty rate provided in this lease based on the value of production from the well as provided in the lease on which such well is located. The compensatory royalty shall be paid in the same proportion that the acreage of this lease has to the acreage of the proration unit surrounding the draining well plus the acreage of this lease. The compensatory royalty shall be paid monthly to the Commissioner of the General Land Office on or before the last day of the month after the month in which the oil or gas is sold and delivered from the well causing the drainage or from the well located within 2500 feet of the leased premises and completed in a producible reservoir under this lease. Notwithstanding anything herein to the contrary, compensatory royalty payable hereunder shall be no less than an amount equal to $12.00, and shall maintain this lease in effect for so long as such payments are made as provided herein.

15. FORFEITURE: If Lessee shall fail or refuse to make payment of any sum within thirty (30) days after it becomes due, or if Lessee or an authorized agent should knowingly make any false return or false report concerning production or drilling, or if Lessee shall fail or refuse to drill any offset well or wells in good faith as required by law and the rules and regulations adopted by the Commissioner of the General Land Office, or if Lessee should fail to file reports in the manner required by law or fail to comply with rules and regulations promulgated by the General Land Office, or refuse the proper authority access to the records pertaining to operations, or if Lessee or an authorized agent should knowingly fail or refuse to give correct information to the proper authority, or knowingly fail or refuse to furnish the General Land Office a correct log of any well, or if this lease is pooled or assigned and the unit designation or assignment is not filed in the General Land Office as required by law, the rights acquired under this lease shall be subject to forfeiture by the Commissioner, and he shall forfeit same when sufficiently informed of the facts which authorize a forfeiture, and when forfeited the area shall again be subject to lease. However, nothing herein shall be construed as waiving the automatic termination of this lease by operations of law or by reason of any special limitation arising hereunder. Forfeitures may be set aside and this lease and all rights thereunder reinstated before the rights of another intervene upon satisfactory evidence to the Commissioner of the General Land Office of future compliance with the provisions of the law and of this lease and the rules and regulations that may be adopted relative hereto.

16. RAILROAD COMMISSION: No natural gas or casinghead gas, including both associated and non-associated gas, produced from the mineral estate subject to this lease may be sold or contracted for sale to any person for ultimate use outside the State unless the Railroad Commission of Texas, after notice and hearing as provided in Title 3 of the N.R.C., finds that:

(a) the person, agency, or entity that executed the lease in question does not require the natural gas or casinghead gas to meet its own existing needs for fuel;

(b) no private or public hospital, nursing home, or other similar health-care facility in this state requires the natural gas or casinghead gas to meet its existing needs for fuel;

(c) no public or private school in this state that provides elementary, secondary, or higher education requires the natural gas or casinghead gas to meet its existing needs for fuel;

(d) no facility of the State or of any county, municipality, or other political subdivision in this state requires the natural gas or casinghead gas to meet its existing needs for fuel;

(e) no producer of food and fiber requires the natural gas or casinghead gas necessary to meet the existing needs of irrigation pumps and other machinery directly related to this

production; and

(f) no person who resides in this state and who relies on natural gas or casinghead gas to provide in whole or part his existing needs for fuel or raw material requires the natural gas or casinghead gas to meet those needs; provided, however, after notice and hearing as provided in Title 3 of the N.R.C., the Railroad Commission of Texas may grant exceptions to these provisions of Subchapter H of Chapter 52 of the N.R.C. if it finds and determines that enforcement of such provisions:

(1) would cause physical waste as defined in Title 3 of the N.R.C.; or

(2) would unreasonably deny to the Lessee an opportunity to produce economically hydrocarbons from the land subject to this lease.

IN TESTIMONY WHEREOF, witness the signature of the Commissioner of the General Land Office, under the seal of the General Land Office, effective as of November 2, 1993.

Garry Mauro

GARRY MAURO
COMMISSIONER OF THE GENERAL LAND OFFICE
OF THE STATE OF TEXAS

Approved:
Energy: RH
Legal(Form): [illegible]
Executive: [illegible]

STATE OF TEXAS
COUNTY OF BRAZOS
The foregoing is a true and correct copy as the same appears on file and recorded in the appropriate records of Brazos, County, Texas.
Thereby certify, on 1-25-94 KM

Mary Ann Ward
County Clerk
Brazos County, Texas

Brazos County
CSJ 50-2-7 and 8
S.H. 6
No. 424

Exhibit "A"

Being 3.00 acres of land, more or less, situated in the J. M. Barrera Survey in Brazos County, Texas. Said 3.00 acres being the same land conveyed to the State from the Federal Trust Company, Independent Executor and Trustee of the R. N. Little Estate, as recorded in Volume 80, Page 532, of the Deed Records of Brazos County, Texas. Said 3.00 acres being a strip of land 100.00 feet in width, 50.00 feet either side of the centerline of S.H. 6 which is more particularly described as follows, to wit;

Beginning at a point on the east line of the R. N. Little property also being the Hudson - Barrera Survey line, where it intersects the centerline of S.H. 6 at Engineer's Centerline Station Number 1172+50. Said point being further located as north 512.00 feet from the west corner of the H. G. Hudson Survey;

Thence due north along the Hudson-Barrera Survey line, a distance of 124.00 feet to a point, being 50.00 feet from and at right angles to the centerline of S.H. 6;

Thence N 38° 23' 00" W, along the north right of way line of said highway, a distance of 232.00 feet to a point 50.00 feet from and at right angles to Engineer's Centerline Station Number 1168+91.00. Said point being the P.T. of a 01° 00' curve to the left whose central angle is 07° 50';

Thence, around said curve, along the north right of way line, a distance of 783.30 feet to the P.C. of said curve, being 50.00 feet from and at right angles to Engineer's Centerline Station Number 1161+07.70;

Thence N 46° 13' 00" W, along the north right of way line, a distance of 190.00 feet to a point on the west line of the R. N. Little property;

Thence departing from the north right of way line, due south, along said west line, a distance of 62.00 feet crossing the centerline of S.H. 6 at Engineer's Centerline Station Number 1159+20.00 and continuing on for a total distance of 124.00 feet to a point on the south right of way line of said highway;

Thence S 46° 13' 00" E, along the south right of way line, a distance of 127.00 to the P.C. of a 01° 00' curve to the right, whose central angles is 07° 50', 50.00 feet from and at right angles to Engineer's Centerline Station Number 1161+07.70;

STATE OF TEXAS
COUNTY OF BRAZOS
The foregoing is a true and correct copy as the same appears on file and recorded in the appropriate records of Brazos, County, Texas.
Thereby certify, on 1-25-94 KM

Mary Ann Ward
County Clerk
Brazos County, Texas

Thence, along the south right of way line, around said curve, a distance of 783.30 feet to the P.T. of said curve, 50.00 from and at right angles to Engineer's Centerline Station Number 1168+91.00;

Thence S 38° 23' 00" E, along the south right of way line, a distance of 395.00 feet to a point on the Hudson - Barrera Survey line, being the Point of Beginning of the tract herein described and contains 3.00 acres.

Being as indicated on the official right of way map which is on file with the Texas Department of Transportation and is identified under Control Numbers 50-2-7 and 8.

424

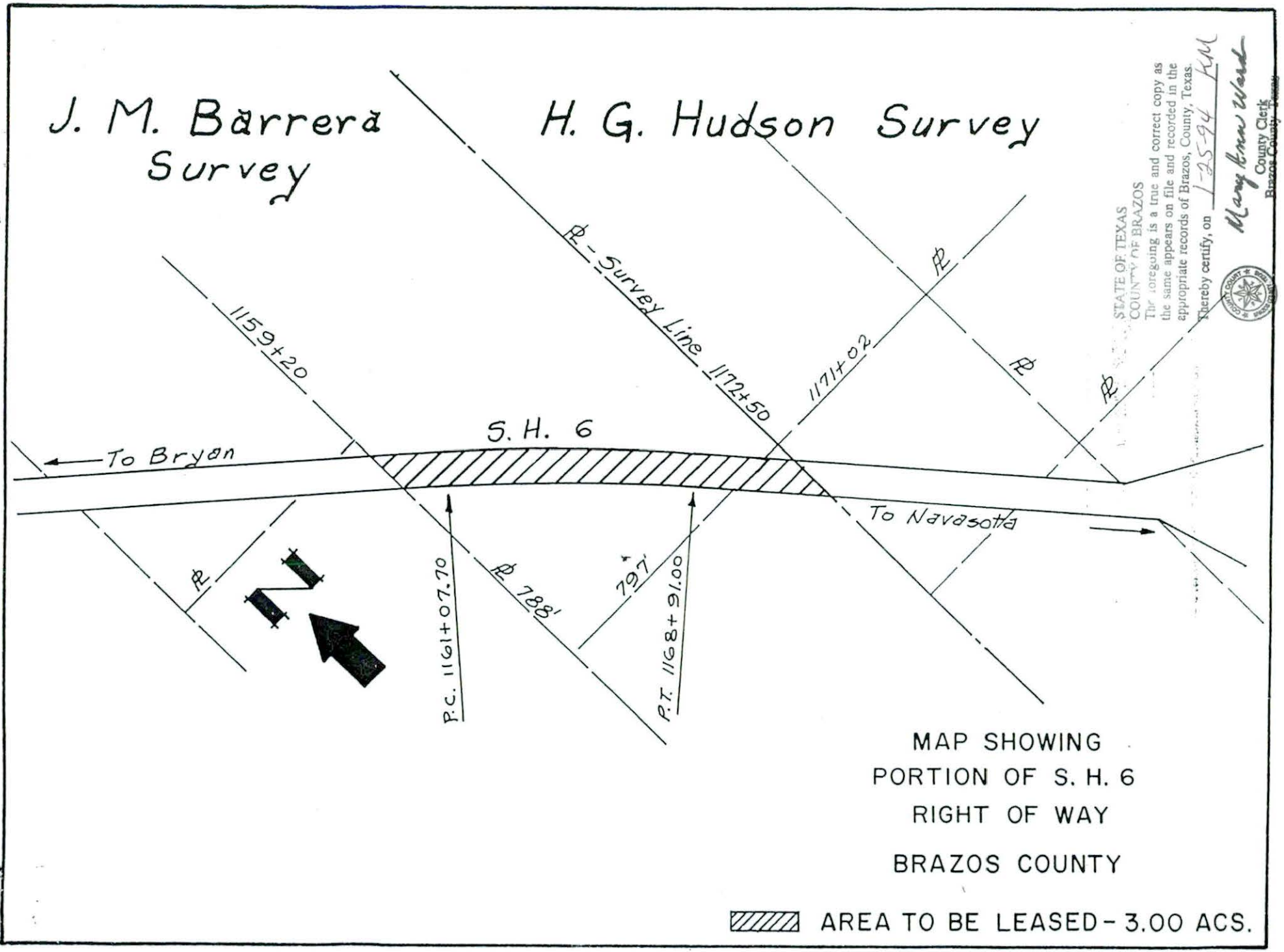

STATE OF TEXAS
COUNTY OF BRAZOS
The foregoing is a true and correct copy as the same appears on file and recorded in the appropriate records of Brazos, County, Texas.
Thereby certify, on 1-25-94 KM
Mary Ann Ward
County Clerk
Brazos County, Texas

Lease
2
M-95380

1

HROW Lease
Revised 10/89

The State of Texas

Austin, Texas

PAID-UP

OIL AND GAS LEASE NO. M-95380
GENERAL LAND OFFICE
AUSTIN, TEXAS

THIS AGREEMENT made and entered into by and between the Commissioner of the General Land Office of the State of Texas, whose address is Stephen F. Austin Building, 1700 North Congress, Austin, Texas, 78701, hereinafter called "Lessor", hereunto authorized by the School Land Board, pursuant to the provisions of Chapters 32, 34 and 52 of the Natural Resources Code (hereinafter called N.R.C.), and amendments thereto, and all applicable rules promulgated by the School Land Board, and Seneca Resources Corporation, whose address is 333 Clay St., Suite 4150, Houston, Texas 77002, hereinafter called "Lessee".

1. Lessor, in consideration of Three Hundred Seventy Five and 00/100 Dollars ($375.00), receipt of which is hereby acknowledged, and of the covenants and agreements of Lessee hereinafter contained, does hereby grant, lease, and let unto Lessee the land covered hereby for the purposes and with the exclusive right of exploring, drilling, mining and operating for, producing and owning oil, gas, and all other hydrocarbons, produced from the land covered hereby. The land covered hereby, herein called "said land" is located in the County of Brazos, State of Texas, and is described as follows:

> 3 acres of land, more or less, situated in said Brazos County, Texas, more particularly described in Exhibit "A"

attached hereto and made a part hereof together with a plat, attached hereto as Exhibit "B", depicting said right-of-way and surrounding area for purposes of illustration only.

For the purpose of determining the amount of any bonus or other payment hereunder, said land shall be deemed to contain 3 acres, whether actually containing more or less, and the above recital of acreage shall be deemed to be the true acreage thereof. Lessor accepts the bonus as lump sum consideration for this lease and all rights and options hereunder.

2. PRIMARY TERM: This lease, which is a "paid up" lease requiring no rentals, shall remain in force for a term of one (1) year from November 2, 1993, hereinafter called "primary term", and as long thereafter as operations, as hereinafter defined, are conducted upon said land with no cessation for more than ninety (90) consecutive days.

3. ROYALTIES: As royalty Lessee covenants and agrees:

(a) To deliver to the credit of Lessor, in the pipe line to which Lessee may connect its well, the equal three sixteenth (3\16) part of all oil produced and saved by Lessee from said land, or from time to time, at the option of Lessee, to pay Lessor the average posted market price of such three sixteenth (3\16) part of such oil at the wells as of the day it is run to the pipe line or storage tanks, Lessor's interest, in either case, to bear none of the cost of treating oil to render it marketable pipe line oil;

(b) To pay Lessor on gas and casinghead gas produced from said land (1) when sold by lessee, three sixteenth (3\16) of the amount realized by Lessee, computed at the mouth of the well, or (2) when used by Lessee off said land or in the manufacture of gasoline or other products, the market value, at the mouth of the well, of three sixteenth (3\16) of such gas and casinghead gas.

(c) If, at the expiration of the primary term or at any time or times thereafter, there is any well on said land or on lands with which said land or any portion thereof has been pooled, capable of producing oil or gas, and all such wells are shut-in, this lease shall, nevertheless, continue in force as though operations were being conducted on said land for so long as said wells are shut-in, and thereafter this lease may be continued in force as if no shut-in had occurred.

(d) Lessee covenants and agrees to use reasonable diligence to produce, utilize, or market the minerals capable of being produced from said wells, but in the exercise of such diligence, Lessee shall not be obligated to install or furnish facilities other than well facilities and ordinary lease facilities of flow lines, separator, and lease tank, and shall not be required to settle

labor trouble or to market gas upon terms unacceptable to Lessee.

(e) If at any time or times after the expiration of the primary term, all such wells are shut-in for a period of ninety consecutive days, and during such time there are no operations on said land, then at or before the expiration of said ninety day period, lessee shall pay or tender, by check of lessee, as royalty, the sum of $6.00. Lessee shall make like payments or tenders at or before the end of each anniversary of the expiration of said ninety day period if upon such anniversary this lease is being continued in force solely by reason of the provisions of this paragraph. Each such payment or tender shall be made to the parties who at the time of payment would be entitled to receive the royalties which would be paid under this lease if the wells were producing. Nothing herein shall impair lessee's right to release as provided in paragraph 5 hereof. In the event of assignment of this lease in whole or in part, liability for payment hereunder shall rest exclusively on the then owner or owners of this lease, severally as to acreage owned by each.

(f) All royalties not taken in kind shall be paid to the Commissioner of the General Land Office at Austin, Texas, in the following manner:

Royalty on oil is due and must be received in the General Land Office on or before the 5th day of the second month succeeding the month of production, and royalty on gas is due and must be received in the General Land Office on or before the 15th day of the second month succeeding the month of production, accompanied by the affidavit of the owner, manager, or other authorized agent, completed in the form and manner prescribed by the General Land Office and showing the gross amount and disposition of all oil and gas produced and the market value of the oil and gas, together with a copy of all documents, records or reports confirming the gross production, disposition and market value including gas meter readings, pipeline receipts, gas line receipts and other checks or memoranda of amount produced and put into pipelines, tanks, or pools and gas lines or gas storage, and any other reports or records which the General Land Office may require to verify the gross production, disposition and market value. In all cases the authority of a manager or agent to act for the Lessee herein must be filed in the General Land Office. Each royalty payment shall be accompanied by a check stub, schedule, summary or other remittance advice showing by the assigned General Land Office lease number the amount of royalty being paid on each lease. If Lessee pays his royalty on or before thirty (30) days after the royalty payment was due, the Lessee owes a penalty of 5% on the royalty or $25.00, whichever is greater. A royalty payment which is over thirty (30) days late shall accrue a penalty of 10% of the royalty due or $25.00, whichever is greater. In addition to a penalty, royalties shall accrue interest at a rate of 12% per year; such interest will begin accruing when the royalty is sixty (60) days overdue.

Affidavits and supporting documents which are not filed when due shall incur a penalty in an amount set by the General Land Office administrative rule which is effective on the date when the affidavits or supporting documents were due. The Lessee shall bear all responsibility for paying or causing royalties to be paid as prescribed by the due date provided herein. Payment of the delinquency penalty shall in no way operate to prohibit the State's right of forfeiture as provided by law nor act to postpone the date on which royalties were originally due. The above penalty provisions shall not apply in cases of title dispute as to the State's portion of the royalty or to that portion of the royalty in dispute as to fair market value. The State shall have first lien upon all oil and gas produced from the area covered by this lease to secure the payment of all unpaid royalty and other sums of money that may become due to the State hereunder.

4. POOLING: (a) Lessee is hereby granted the right, at its option, to pool or unitize any land covered by this lease with any other land covered by this lease, and/or with any other land, lease, or leases, as to any or all minerals or horizons. Units pooled for oil hereunder shall not exceed 160 acres each in area, and units pooled for gas hereunder shall not exceed in area 640 acres each plus a tolerance of ten percent (10%) thereof, unless oil or gas units of a greater size are allowed under or prescribed by rules of the Railroad Commission of Texas. A unit established hereunder shall be valid and effective for all purposes of this lease even though there may be mineral, royalty, or leasehold interests in lands within the unit which are not effectively pooled or unitized. Any operations conducted on any part of such unitized land shall be considered, for all purposes, except the payment of royalty, as operations conducted upon said land under this lease. There shall be allocated to the land covered by this lease within each such unit (or to each separate tract within the unit if this lease covers separate tracts within the unit) the proportion of the total production of unitized minerals from the unit, after deducting any used in lease or unit operations, which the number of surface acres in such land (or in each such separate tract) covered by this lease within the unit bears to the total number of surface acres in the unit, and the production so allocated shall be considered for all purposes, including payment or delivery of royalty, overriding royalty and any other payments out of production, to be the entire production of unitized minerals from the land to which allocated in the same manner as though produced therefrom under the terms of this lease. The owner of the reversionary estate of any term royalty or mineral estate agrees that the accrual of royalties pursuant to this paragraph or of shut-in royalties from a well on the unit shall satisfy any limitation of term requiring production of oil or gas. The formation of any unit hereunder which includes land not covered by this lease shall not have the effect of exchanging or transferring any interest under this lease (including, without limitation, any shut-in royalty which may become payable under this lease) between

parties owning interests in land covered by this lease and parties owning interests in land not covered by this lease. Neither shall it impair the right of Lessee to release as provided in paragraph 5 hereof, except that Lessee may not so release as to lands within a unit while there are operations thereon for unitized minerals unless all pooled leases are released as to lands within the unit. At any time while this lease is in force Lessee may dissolve any unit established hereunder by filing for record in the public office where this lease is recorded a declaration to that effect, if at that time no operations are being conducted thereon for unitized minerals. Subject to the provisions of this paragraph 4, a unit once established hereunder shall remain in force for so long as any lease subject thereto shall remain in force. If this lease now or hereafter covers separate tracts, no pooling or unitization of royalty interests as between any such separate tracts is intended or shall be implied or result merely from the inclusion of such separate tracts within this lease but Lessee shall nevertheless have the right to pool or unitize as provided in this paragraph 4 with consequent allocation of production as herein provided. As used in this paragraph 4, the words "separate tract" mean any tract with royalty ownership differing, now or hereafter, either as to parties or amounts, from that as to any other part of the leased premises.

(b) Neither unit production of oil or gas, nor unit operations, nor payment of shut-in royalties from a unit gas well, shall serve to hold the lease in force as to any area outside the unit, regardless of whether the production, maintenance of a shut-in gas well, or operations are actually located on the State tract or not.

(c) Lessee agrees to file with the General Land Office a copy of any unit designation which this lease is included within ninety (90) days of such designation.

5. RELEASE: Lessee may relinquish the rights granted hereunder to the State at any time by recording the relinquishment in the county where this area is situated and filing the recorded relinquishment or certified copy of same in the General Land Office within ninety (90) days after its execution accompanied by the prescribed filing fee. Such relinquishment will not have the effect of releasing Lessee from any liability theretofore accrued in favor of the State.

6. REWORK: If at any time or times during the primary term operations are conducted on said land and if all operations are discontinued, this lease shall thereafter terminate at the end of the primary term or on the ninetieth day after discontinuance of all operations, whichever is the later date, unless on such later date either (1) Lessee is conducting operations or (2) the shut-in well provisions of paragraph 3 or the provisions of paragraph 9 are applicable. Whenever used in this lease the word "operations" shall mean operations for and any of the following: drilling,

testing, completing, reworking, recompleting, deepening, plugging back or repairing of a well in search for or in an endeavor to obtain production of oil or gas, or production of oil or gas in paying quantities.

7. MINERAL USE: Lessee shall have the use, free from royalty, of oil and gas produced from said land in all operations hereunder.

8. NOTICE: In the event Lessor considers that Lessee has not complied with all its obligations hereunder, both express and implied, Lessor shall notify Lessee in writing, setting out specifically in what respects Lessee has breached this contract. Lessee shall then have sixty (60) days after receipt of said notice within which to meet or commence to meet all or any part of the breaches alleged by Lessor. The service of said notice shall be precedent to the bringing of any action by Lessor on said lease for any cause, and no such action shall be brought until the lapse of sixty (60) days after service of such notice on Lessee. Neither the service of said notice nor the doing of any acts by Lessee aimed to meet all or any of the alleged breaches shall be deemed an admission or presumption that Lessee has failed to perform all its obligations hereunder. If this lease is canceled for any cause, it shall nevertheless remain in force and effect as to (1) sufficient acreage around each well as to which there are operations to constitute a drilling or maximum allowable unit under applicable governmental regulations, (but in no event less than forty acres), such acreage to be designated by Lessee as nearly as practicable in the form of a square centered at the well, or in such shape as then existing spacing rules require; and (2) any part of said land included in a pooled unit on which there are operations.

9. FORCE MAJEURE: If, while this lease is in force, at, or after the expiration of the primary term hereof, it is not being continued in force by reason of the shut-in well provisions of paragraph 3 hereof, and Lessee is not conducting operations on said land by reason of (1) any law, order, rule or regulation, (whether or not subsequently determined to be invalid) or (2) any other cause, whether similar or dissimilar, (except financial) beyond the reasonable control of Lessee, the primary term shall be extended until the first anniversary date hereof occurring ninety (90) or more days following the removal of such delaying cause, and this lease may be extended thereafter by operations as if such delay had not occurred.

10. LESSER ESTATE,CLAUSE: If this lease covers a less interest in the oil or gas in all or any part of said land than the entire and undivided fee simple estate (whether lessors interest is herein specified or not), or no interest therein, then the royalties, and other monies accruing from any part as to which this lease covers less than such full interest, shall be paid only in the proportion which the interest therein, if any, covered by this lease bears to the whole and undivided fee simple estate therein.

11. ASSIGNMENTS: This lease may be transferred at any time. All transfers must reference the lease by file number and must be recorded in the county where the land covered hereby is located, and the recorded transfer or a copy certified to by the County Clerk of the county where the transfer is recorded must be filed in the General Land Office within ninety (90) days of the execution date, as provided by N.R.C. Section 52.026, accompanied by the prescribed filing fee. Every transferee shall succeed to all rights and be subject to all obligations, liabilities, and penalties owed to the State by the original Lessee or any prior transferee of the lease, including any liabilities to the State for unpaid royalties.

12. WELL INFORMATION: Lessee agrees to forthwith furnish Lessor, upon written request, with copies of all drilling logs, electrical logs, cores and core records and other information pertaining to all wells drilled by lessee either on the leased premises or acreage pooled therewith, when requested to do so. Said information shall remain confidential as required by statute.

13. SURFACE: Notwithstanding anything herein to the contrary, it is agreed that Lessee will not conduct any exploration or drilling on the surface of the leased premises or use the surface in the exercise of any rights herein granted. Any development of said land shall be by means of a directional well located off the leased premises, or by pooling of said land with other land, lease or leases as hereinabove provided.

14. COMPENSATORY ROYALTY: Lessee shall pay a compensatory royalty if this lease is not being held by production on the leased premises, by production from a pooled unit, or by payment of shut-in royalties in accordance with the terms of this lease, and if oil or gas is sold or delivered in paying quantities from a well located within 2500 feet of the leased premises and completed in a producible reservoir underlying the area leased hereunder or in any case in which drainage is occurring. Such compensatory royalty shall be paid at the royalty rate provided in this lease based on the value of production from the well as provided in the lease on which such well is located. The compensatory royalty shall be paid in the same proportion that the acreage of this lease has to the acreage of the proration unit surrounding the draining well plus the acreage of this lease. The compensatory royalty shall be paid monthly to the Commissioner of the General Land Office on or before the last day of the month after the month in which the oil or gas is sold and delivered from the well causing the drainage or from the well located within 2500 feet of the leased premises and completed in a producible reservoir under this lease. Notwithstanding anything herein to the contrary, compensatory royalty payable hereunder shall be no less than an amount equal to $12.00, and shall maintain this lease in effect for so long as such payments are made as provided herein.

15. FORFEITURE: If Lessee shall fail or refuse to make payment of any sum within thirty (30) days after it becomes due, or if Lessee or an authorized agent should knowingly make any false return or false report concerning production or drilling, or if Lessee shall fail or refuse to drill any offset well or wells in good faith as required by law and the rules and regulations adopted by the Commissioner of the General Land Office, or if Lessee should fail to file reports in the manner required by law or fail to comply with rules and regulations promulgated by the General Land Office, or refuse the proper authority access to the records pertaining to operations, or if Lessee or an authorized agent should knowingly fail or refuse to give correct information to the proper authority, or knowingly fail or refuse to furnish the General Land Office a correct log of any well, or if this lease is pooled or assigned and the unit designation or assignment is not filed in the General Land Office as required by law, the rights acquired under this lease shall be subject to forfeiture by the Commissioner, and he shall forfeit same when sufficiently informed of the facts which authorize a forfeiture, and when forfeited the area shall again be subject to lease. However, nothing herein shall be construed as waiving the automatic termination of this lease by operations of law or by reason of any special limitation arising hereunder. Forfeitures may be set aside and this lease and all rights thereunder reinstated before the rights of another intervene upon satisfactory evidence to the Commissioner of the General Land Office of future compliance with the provisions of the law and of this lease and the rules and regulations that may be adopted relative hereto.

16. RAILROAD COMMISSION: No natural gas or casinghead gas, including both associated and non-associated gas, produced from the mineral estate subject to this lease may be sold or contracted for sale to any person for ultimate use outside the State unless the Railroad Commission of Texas, after notice and hearing as provided in Title 3 of the N.R.C., finds that:

(a) the person, agency, or entity that executed the lease in question does not require the natural gas or casinghead gas to meet its own existing needs for fuel;

(b) no private or public hospital, nursing home, or other similar health-care facility in this state requires the natural gas or casinghead gas to meet its existing needs for fuel;

(c) no public or private school in this state that provides elementary, secondary, or higher education requires the natural gas or casinghead gas to meet its existing needs for fuel;

(d) no facility of the State or of any county, municipality, or other political subdivision in this state requires the natural gas or casinghead gas to meet its existing needs for fuel;

(e) no producer of food and fiber requires the natural gas or casinghead gas necessary to meet the existing needs of irrigation pumps and other machinery directly related to this

production; and

(f) no person who resides in this state and who relies on natural gas or casinghead gas to provide in whole or part his existing needs for fuel or raw material requires the natural gas or casinghead gas to meet those needs; provided, however, after notice and hearing as provided in Title 3 of the N.R.C., the Railroad Commission of Texas may grant exceptions to these provisions of Subchapter H of Chapter 52 of the N.R.C. if it finds and determines that enforcement of such provisions:

(1) would cause physical waste as defined in Title 3 of the N.R.C.; or

(2) would unreasonably deny to the Lessee an opportunity to produce economically hydrocarbons from the land subject to this lease.

IN TESTIMONY WHEREOF, witness the signature of the Commissioner of the General Land Office, under the seal of the General Land Office, effective as of November 2, 1993.

Garry Mauro

GARRY MAURO
COMMISSIONER OF THE GENERAL LAND OFFICE
OF THE STATE OF TEXAS

Approved:
Energy: eH
Legal(Form): DMJ
Executive: JH

Brazos County
CSJ 50-2-7 and 8
S.H. 6
No. 424

Exhibit "A"

Being 3.00 acres of land, more or less, situated in the J. M. Barrera Survey in Brazos County, Texas. Said 3.00 acres being the same land conveyed to the State from the Federal Trust Company, Independent Executor and Trustee of the R. N. Little Estate, as recorded in Volume 80, Page 532, of the Deed Records of Brazos County, Texas. Said 3.00 acres being a strip of land 100.00 feet in width, 50.00 feet either side of the centerline of S.H. 6 which is more particularly described as follows, to wit;

Beginning at a point on the east line of the R. N. Little property also being the Hudson - Barrera Survey line, where it intersects the centerline of S.H. 6 at Engineer's Centerline Station Number 1172+50. Said point being further located as north 512.00 feet from the west corner of the H. G. Hudson Survey;

Thence due north along the Hudson-Barrera Survey line, a distance of 124.00 feet to a point, being 50.00 feet from and at right angles to the centerline of S.H. 6;

Thence N 38° 23' 00" W, along the north right of way line of said highway, a distance of 232.00 feet to a point 50.00 feet from and at right angles to Engineer's Centerline Station Number 1168+91.00. Said point being the P.T. of a 01° 00' curve to the left whose central angle is 07° 50';

Thence, around said curve, along the north right of way line, a distance of 783.30 feet to the P.C. of said curve, being 50.00 feet from and at right angles to Engineer's Centerline Station Number 1161+07.70;

Thence N 46° 13' 00" W, along the north right of way line, a distance of 190.00 feet to a point on the west line of the R. N. Little property;

Thence departing from the north right of way line, due south, along said west line, a distance of 62.00 feet crossing the centerline of S.H. 6 at Engineer's Centerline Station Number 1159+20.00 and continuing on for a total distance of 124.00 feet to a point on the south right of way line of said highway;

Thence S 46° 13' 00" E, along the south right of way line, a distance of 127.00 to the P.C. of a 01° 00' curve to the right, whose central angles is 07° 50', 50.00 feet from and at right angles to Engineer's Centerline Station Number 1161+07.70;

Thence, along the south right of way line, around said curve, a distance of 783.30 feet to the P.T. of said curve, 50.00 from and at right angles to Engineer's Centerline Station Number 1168+91.00;

Thence S 38° 23' 00" E, along the south right of way line, a distance of 395.00 feet to a point on the Hudson - Barrera Survey line, being the Point of Beginning of the tract herein described and contains 3.00 acres.

Being as indicated on the official right of way map which is on file with the Texas Department of Transportation and is identified under Control Numbers 50-2-7 and 8.

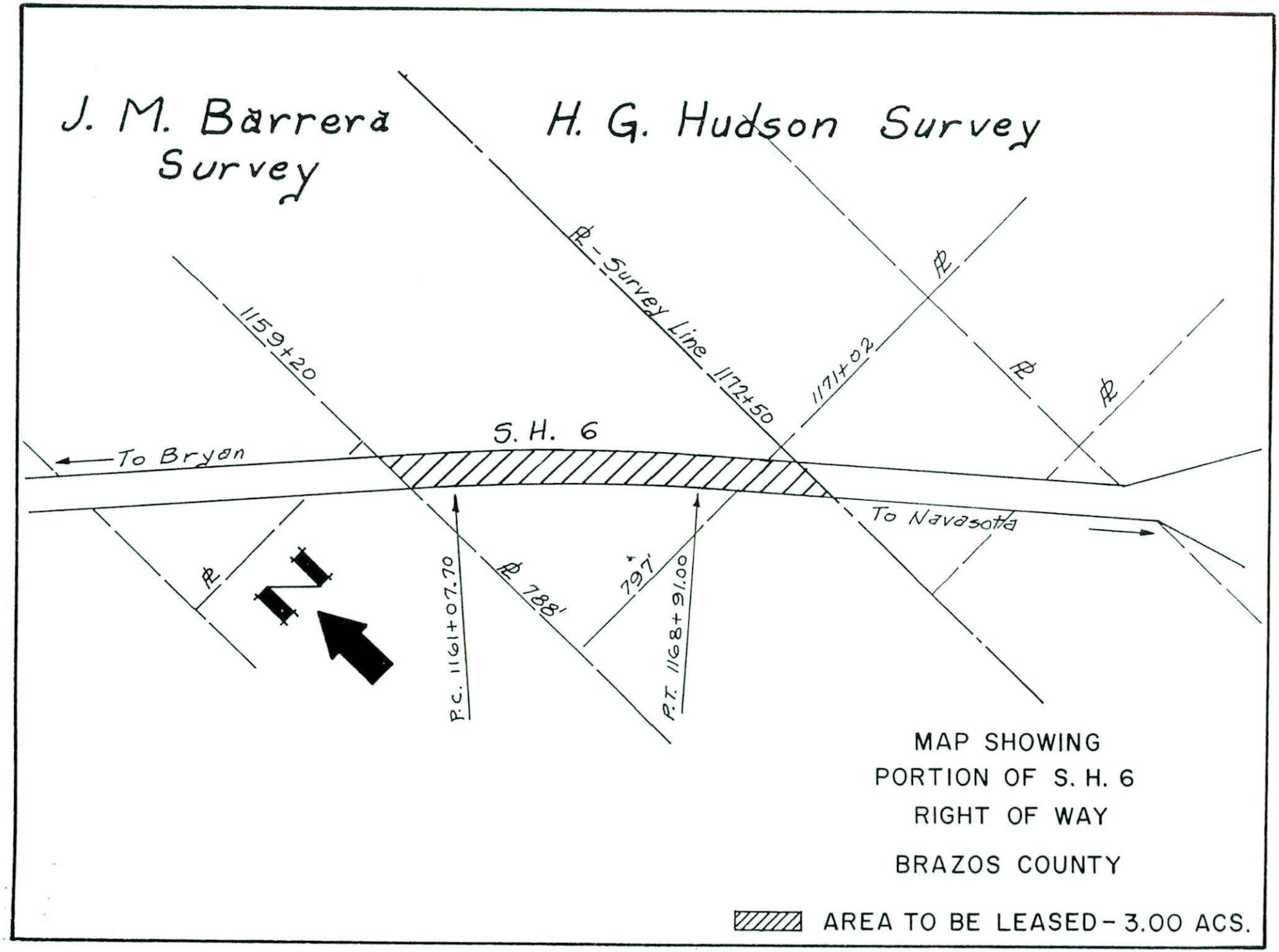
J. M. Barrera Survey
H. G. Hudson Survey
℄ - Survey Line
1159+20
1172+50
1171+02
S. H. 6
To Bryan
To Navasotta
℄
℄
℄
℄
℄
788'
797'
P.C. 1161+07.70
P.T. 1168+91.00
N
MAP SHOWING
PORTION OF S. H. 6
RIGHT OF WAY
BRAZOS COUNTY
AREA TO BE LEASED - 3.00 ACS.

GENERAL LAND OFFICE

GARRY MAURO
COMMISSIONER

MEMORANDUM

DATE: October 27, 1993

TO: School Land Board

FROM: Robert Hatter / Energy Resources

SUBJECT: Application To Lease Right-of-Way

5/5/95
See letter dated 8-8-94 w/ attachments to Ms. Olson file

APPLICANT: Seneca Resources Corporation

REFERENCE: Being 3.0 acres, more or less, of State Highway 6 situated in the J. M. Barrera Svy., Brazos County, Texas

The following terms were provide for in the adjacent leases:

	High	Low
Bonus/Acre:	$125.00	$100.00
Royalty:	3/16	1/8
Delay Rental:	$2.00	Paid-up
Primary Term:	5 year	5 year

The application has been reviewed by the Lease Administration Department and approved by the Department of Transportation. Subchapter F, Chapter 32 of the Texas Natural Resources Code requires the approval of the application to the lease with the following terms:

Bonus/Acre:	$125.00 per acre
Royalty:	3/16 royalty
Delay Rental:	~~$2.00~~ per acre none
Primary Term:	~~5 year~~ one yr

Seneca Resources Corporation holds the mineral interest in the leases adjoining the above referenced right-of-way. Therefore, the applicant is entitled to a lease of the entire 3.0 acres. The applicant has submitted a title opinion showing that the state owns the entire mineral estate in the right-of-way and has submitted all other pertinent information required by the School Land Board rules.

Texas Department of Transportation

P.O. BOX 5075 • AUSTIN, TEXAS 78763-5075 • (512) 416-2901

October 12, 1993

Contact: ROW

Mr. Garry Mauro
Commissioner
General Land Office
Petroleum and Mineral Division
1700 North Congress Avenue
Austin, Texas

Dear Commissioner Mauro:

We have reviewed the proposed oil and gas lease applications and the following request for preferential leases are considered sufficiently documented to be presented to the Public School Land Board for approval:

County	Nominator	Bonus	Royalty	Primary Term	Delay Rental
Brazos	Seneca Resources Corp.	$125.00	3/16	5 Years	$2.00
Brazos	Union Pacific Resources Co.	$125.00	1/5	3 Years	$27.50
Fayette	Patterson Petroleum, Inc.	$10.00	21%	1 Year	None
Fayette	Gemini Exploration Co.	$100.00	1/5	2 Years	$20.00

Attached is one copy each of the field notes and sketch for the proposed leases. If additional information is needed, please contact Jimmy Perry at (512) 416-2874.

Sincerely,

Gary Bernethy, P.E.
Director of Right of Way

JP:tz
Attachments

Brazos County
CSJ 50-2-7 and 8
S.H. 6
No. 424

Exhibit "A"

Being 3.00 acres of land, more or less, situated in the J. M. Barrera Survey in Brazos County, Texas. Said 3.00 acres being the same land conveyed to the State from the Federal Trust Company, Independent Executor and Trustee of the R. N. Little Estate, as recorded in Volume 80, Page 532, of the Deed Records of Brazos County, Texas. Said 3.00 acres being a strip of land 100.00 feet in width, 50.00 feet either side of the centerline of S.H. 6 which is more particularly described as follows, to wit;

Beginning at a point on the east line of the R. N. Little property also being the Hudson - Barrera Survey line, where it intersects the centerline of S.H. 6 at Engineer's Centerline Station Number 1172+50. Said point being further located as north 512.00 feet from the west corner of the H. G. Hudson Survey;

Thence due north along the Hudson-Barrera Survey line, a distance of 124.00 feet to a point, being 50.00 feet from and at right angles to the centerline of S.H. 6;

Thence N 38° 23' 00" W, along the north right of way line of said highway, a distance of 232.00 feet to a point 50.00 feet from and at right angles to Engineer's Centerline Station Number 1168+91.00. Said point being the P.T. of a 01° 00' curve to the left whose central angle is 07° 50';

Thence, around said curve, along the north right of way line, a distance of 783.30 feet to the P.C. of said curve, being 50.00 feet from and at right angles to Engineer's Centerline Station Number 1161+07.70;

Thence N 46° 13' 00" W, along the north right of way line, a distance of 190.00 feet to a point on the west line of the R. N. Little property;

Thence departing from the north right of way line, due south, along said west line, a distance of 62.00 feet crossing the centerline of S.H. 6 at Engineer's Centerline Station Number 1159+20.00 and continuing on for a total distance of 124.00 feet to a point on the south right of way line of said highway;

Thence S 46° 13' 00" E, along the south right of way line, a distance of 127.00 to the P.C. of a 01° 00' curve to the right, whose central angles is 07° 50', 50.00 feet from and at right angles to Engineer's Centerline Station Number 1161+07.70;

Thence, along the south right of way line, around said curve, a distance of 783.30 feet to the P.T. of said curve, 50.00 from and at right angles to Engineer's Centerline Station Number 1168+91.00;

Thence S 38° 23' 00" E, along the south right of way line, a distance of 395.00 feet to a point on the Hudson - Barrera Survey line, being the Point of Beginning of the tract herein described and contains 3.00 acres.

Being as indicated on the official right of way map which is on file with the Texas Department of Transportation and is identified under Control Numbers 50-2-7 and 8.

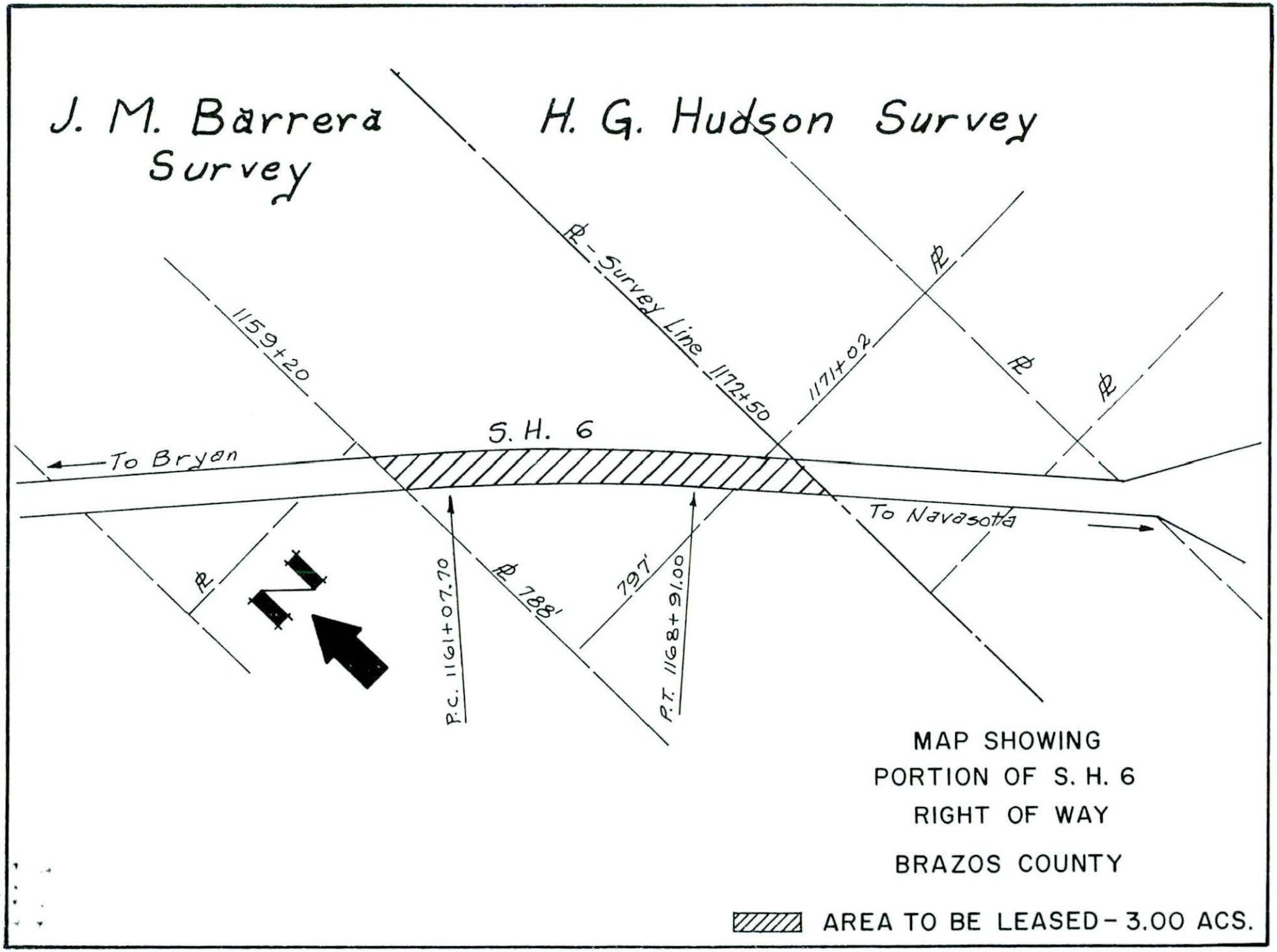
J. M. Barrera Survey
H. G. Hudson Survey
℄ - Survey Line
1159+20
1172+50
1171+02
S. H. 6
To Bryan
To Navasota
℄ 788'
797'
P.C. 1161+07.70
P.T. 1168+91.00
N
MAP SHOWING
PORTION OF S. H. 6
RIGHT OF WAY
BRAZOS COUNTY
AREA TO BE LEASED - 3.00 ACS.

M-95380
Memo
10.27.93

2

Highway Lease Applicant

Name of Lease Applicant: Seneca Resources Corporation

County & Tract Description:

Brazos Co. / 3 AC. Along St. Hwy 6 in J.M. Barrera Sur.

Date Sent to Highway Department:

Check List:

- Letter of Application ✓ and plat ✓
- Names and addresses of adjacent mineral owners OK
- Affidavit of non-production within 2500 feet HR
- $100 processing fee yes
- Written waiver of statutory notice ✓
- Certified copy/copies of adjacent lease/leases ✓
- Notarized affidavit of consideration paid ✓
- Title Opinion ✓
- Is the right-of-way on Relinquishment Act Land NO

Remarks:

Date Appeared Before SLB:

Approved:

Disapproved:

Problems:

Bonus 125.00 100.00
Roy 3/16 1/8
Term ~~5yr~~ 1yr
Rental NONE 1.00
Stat IN 2.00

3 Ts 5.00
5.63
$380.63 → Comm 10/23

Date Lease Issued:

M-95380

Worksheet

3

Seneca Resources Corporation
a National Fuel Gas System company

August 10, 1993

Texas General Land Office
Lease Administration
1700 N. Congress Avenue, Rm. 640
Austin, TX 78701

Attn: Mr. Robert Hatter, Manager
Lease Administration

Re: Application to Lease
Highway Right-of-Way Tract
N. E. Millican Prospect
Brazos County, Texas

3 Ac.

Gentlemen:

Seneca Resources Corporation ("Seneca") hereby makes application to acquire an oil and gas lease covering the highway tract shown on the attached plat and described in the attachment thereto for the specific purpose of drilling a horizontal well.

Seneca is the owner of valid and existing oil and gas leases covering the mineral estate adjoining the highway tract and as such is the "Adjacent Mineral Owner" with preferential leasing rights as defined in the procedures for leasing State Highway tracts. Enclosed is a copy of Second Supplemental Title Opinion dated August 6, 1993, written by Jackson & Walker, L.L.P. covering the highway tract and the adjoining lands.

In addition to the foregoing, we are submitting the following:

1. Applicant's written waiver of the statutory notice of the proposed leasing.

2. Certified copies of the oil and gas leases covering the land adjacent to the highway tract.

3. Notarized Affidavit of the consideration paid by Seneca for leases on the adjacent land.

4. Affidavit that leasing the right of way is for the specific purpose of drilling a horizontal well.

I:\JC\015

333 CLAY STREET/SUITE 4150/HOUSTON, TEXAS 77002/(713) 658-0191

Enclosed is Seneca's check in the amount of $100.00 to cover the processing fee for this application.

We would appreciate your considering the enclosed material and advising, as soon as possible, whether the State is agreeable to issuing a lease on the subject tract. If you should have any questions regarding this matter, please let us know.

Very truly yours,

Robert C. Williams
Land Manager

RCW/jt

Enclosures

I:\JC\015

DETACH STATEMENT BEFORE DEPOSITING

SENECA RESOURCES CORPORATION
333 CLAY, SUITE 4150
HOUSTON, TEXAS 77002

052522

INVOICE NUMBER	INVOICE DATE	VOUCHER NUMBER	INVOICE AMOUNT	CREDIT	NET REMITTANCE
	Application to lease Highway right of way tract from State of TExas N. E. Millican Prospect				100.00
	170				

93073096

RECEIVED
AUG 11 1993
ENERGY RESOURCES

M-95380
L+R
8.10.93

(4)

8.11.93

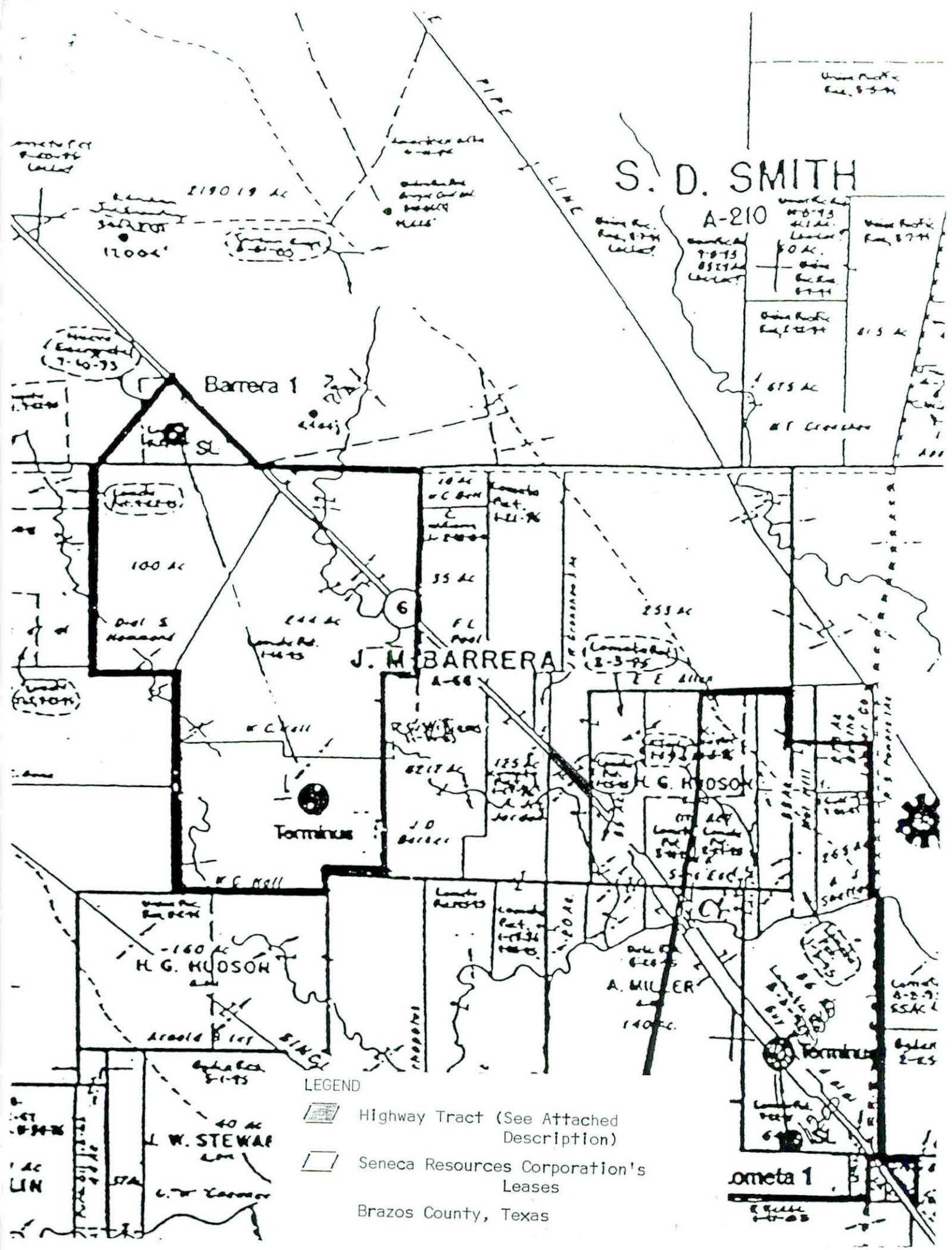
S. D. SMITH
A-210
Barrera 1
J. M. BARRERA
H. G. HUDSON
H. G. HUDSON
A. MILLER
Terminus
Terminus
W. STEWAR
ometa 1
LEGEND
Highway Tract (See Attached Description)
Seneca Resources Corporation's Leases
Brazos County, Texas

HIGHWAY RIGHT OF WAY TRACT

Being situated in the J. M. Barrera Survey; beginning at a point which is on the east line of the Little tract where it bounds the W. K. Symms tract, said point being 450 feet north of the west corner of the H. G. Hudson survey and 50 feet from the center of the proposed highway; at station 1172 plus 50;

THENCE due north along the Hudson-Barrerra Survey line a distance of 124 feet to a point which is 50 feet from the center of the proposed highway;

THENCE north 38-23 west along a line parallel to and 50 feet from the center of the proposed highway a distance of 232 feet;

THENCE following a 1 degree curve to the left a distance of 783 feet;

THENCE north 46-13 west a distance of 190 feet;

THENCE due south along a fence line a distance of 124 feet to a point which is 50 feet from the center of the proposed highway;

THENCE south 46-13 east a distance of 127 feet;

THENCE following a 1 degree curve to the right a distance of 783 feet;

THENCE south 38-23 east along a line parallel to and 50 feet from the center of the proposed road a distance of 395 feet to the place of beginning, and containing three (3) acres of land.

M-95380
Plot
5

WAIVER

Seneca Resources Corporation, a Pennsylvania Corporation, whose address is 333 Clay Street, Suite 4150, Houston, Texas 77002, being the owner of existing Oil and Gas Leases adjoining a Highway right-of-way tract described on the attachment hereto, hereby waives its statutory right to notice of the proposed leasing of the right of way by the State of Texas.

Executed this 9th day of August, 1993.

SENECA RESOURCES CORPORATION

Robert C. Williams

Robert C. Williams
Land Manager

STATE OF TEXAS

COUNTY OF HARRIS

This instrument was acknowledged before me on this the 9th day of August, 1993, by ROBERT C. WILLIAMS, Land Manager of SENECA RESOURCES CORPORATION, a Pennsylvania corporation, on behalf of said corporation.

JOY TRAPOLINO
NOTARY PUBLIC, STATE OF TEXAS
MY COMMISSION EXPIRES
OCT. 17, 1997

Joy Trapolino

Notary Public in and for
the State of Texas

HIGHWAY RIGHT OF WAY TRACT

Being situated in the J. M. Barrera Survey; beginning at a point which is on the east line of the Little tract where it bounds the W. K. Symms tract, said point being 450 feet north of the west corner of the H. G. Hudson survey and 50 feet from the center of the proposed highway; at station 1172 plus 50;

THENCE due north along the Hudson-Barrerra Survey line a distance of 124 feet to a point which is 50 feet from the center of the proposed highway;

THENCE north 38-23 west along a line parallel to and 50 feet from the center of the proposed highway a distance of 232 feet;

THENCE following a 1 degree curve to the left a distance of 783 feet;

THENCE north 46-13 west a distance of 190 feet;

THENCE due south along a fence line a distance of 124 feet to a point which is 50 feet from the center of the proposed highway;

THENCE south 46-13 east a distance of 127 feet;

THENCE following a 1 degree curve to the right a distance of 783 feet;

THENCE south 38-23 east along a line parallel to and 50 feet from the center of the proposed road a distance of 395 feet to the place of beginning, and containing three (3) acres of land.

M.95380 (6)
waiver
8.9.93

AFFIDAVIT

The State of Texas

County of Harris

BEFORE ME, the undersigned authority, on this day personally appeared Robert C. Williams, Land Manager of Seneca Resources Corporation, who being duly sworn, deposes and says:

That he is familiar with the acquisition of the Oil and Gas Leases described below covering lands adjacent to the Highway right-of-way tract and knows for a fact that $125.00 per net mineral acre bonus consideration was paid by Seneca Resources Corporation for purchase of the leases. Said leases are described as follows:

1. Oil, Gas and Mineral Lease dated December 16, 1977, recorded in Volume 29, Page 525, Oil and Gas Lease Records of Brazos County, Texas from Mills P. Walker, Lessor, to R. L. Reese, Lessee.

2. Oil, Gas and Mineral Lease dated February 15, 1978, recorded in Volume 30, Page 428, Oil and Gas Lease Records of Brazos County, Texas from John B. Dougherty and Lucille Dougherty, a feme sole, Lessors, to Wm. C. Richardson, Lessee.

3. Oil, Gas and Mineral Lease dated February 15, 1978, recorded in Volume 30, Page 432, Oil and Gas Lease Records of Brazos County, Texas from John M. Lawrence, III, Trustee, Lessor, to Wm. C. Richardson, Lessee.

Further Affiant Sayeth Not.

Robert C. Williams

STATE OF TEXAS

COUNTY OF HARRIS

Subscribed and Sworn to before me by Robert C. Williams, this 9th day of August, 1993.

JOY TRAPOLINO
NOTARY PUBLIC, STATE OF TEXAS
MY COMMISSION EXPIRES
OCT. 17, 1997

Notary Public in and for
State of Texas

I:\JC\013

STATE OF TEXAS

COUNTY OF HARRIS

This instrument was acknowledged before me on this the 9th day of August, 1993, by ROBERT C. WILLIAMS, Land Manager of SENECA RESOURCES CORPORATION, a Pennsylvania corporation, on behalf of said corporation.

JOY TRAPOLINO
NOTARY PUBLIC, STATE OF TEXAS
MY COMMISSION EXPIRES
OCT. 17, 1997

Joy Trapolino
Notary Public in and for
the State of Texas

M-95380
Apl.
8-9-93

(7)

AFFIDAVIT

The State of Texas

County of Harris

BEFORE ME, the undersigned authority, on this day personally appeared Robert C. Williams, Land Manager of Seneca Resources Corporation, who being duly sworn, deposes and says:

That he is coordinating the oil and gas leasing of the Highway Right-of-Way tract described on the attachment hereto and knows that Seneca Resources Corporation is leasing the right-of-way for the specific purpose of drilling a horizontal well.

Further Affiant Sayeth Not.

Robert C. Williams
Land Manager

STATE OF TEXAS

COUNTY OF HARRIS

Subscribed and Sworn to before me by Robert C. Williams, this 10 day of August, 1993.

JOY TRAPOLINO
NOTARY PUBLIC, STATE OF TEXAS
MY COMMISSION EXPIRES
OCT. 17, 1997

Notary Public in and for
the State of Texas

I:\JC\015

STATE OF TEXAS

COUNTY OF HARRIS

This instrument was acknowledged before me on this the 10 day of August, 1993, by Robert C. Williams, Land Manager of Seneca Resources Corporation, a Pennsylvania corporation, on behalf of said corporation.

JOY TRAPOLINO
NOTARY PUBLIC, STATE OF TEXAS
MY COMMISSION EXPIRES
OCT. 17, 1997

Joy Trapolino

Notary Public in and for
the State of Texas

I:\JC\015

HIGHWAY RIGHT OF WAY TRACT

Being situated in the J. M. Barrera Survey; beginning at a point which is on the east line of the Little tract where it bounds the W. K. Symms tract, said point being 450 feet north of the west corner of the H. G. Hudson survey and 50 feet from the center of the proposed highway; at station 1172 plus 50;

THENCE due north along the Hudson-Barrerra Survey line a distance of 124 feet to a point which is 50 feet from the center of the proposed highway;

THENCE north 38-23 west along a line parallel to and 50 feet from the center of the proposed highway a distance of 232 feet;

THENCE following a 1 degree curve to the left a distance of 783 feet;

THENCE north 46-13 west a distance of 190 feet;

THENCE due south along a fence line a distance of 124 feet to a point which is 50 feet from the center of the proposed highway;

THENCE south 46-13 east a distance of 127 feet;

THENCE following a 1 degree curve to the right a distance of 783 feet;

THENCE south 38-23 east along a line parallel to and 50 feet from the center of the proposed road a distance of 395 feet to the place of beginning, and containing three (3) acres of land.

M-95380
Aff.
8.10.93

8

8.11.93

JACKSON & WALKER, L.L.P.
ATTORNEYS AND COUNSELORS
1100 LOUISIANA, SUITE 4200
P.O. BOX 4771
HOUSTON, TEXAS 77210-4771
TELEPHONE (713) 752-4200

TELECOPIER (713) 752-4221
TELEX 79-1932

OTHER LOCATIONS
DALLAS
FORT WORTH
SAN ANTONIO

August 6, 1993

Seneca Resources Corporation
333 Clay Street, Suite 4150
Houston, Texas 77002

Attention: Mr. Robert C. Williams

Re: Mills P. Walker et al. Leases
1,185 Acres
Andrew D. Houston Survey, A-133, and
José Maria Barrera Survey, A-68,
Brazos County, Texas
Our Firm File No. 002507.00166

Gentlemen:

SECOND SUPPLEMENTAL TITLE OPINION

DESCRIPTION OF LAND

Tract 1

1,182 acres, more or less, out of the Andrew D. Houston Survey, A-133, and the José Maria Barrera Survey, A-68, Brazos County, Texas, being all of that certain tract containing 1,185 acres described as Second Tract in that certain Oil, Gas and Mineral Lease dated December 16, 1977, executed by Mills P. Walker, Lessor, to R. L. Reese, Lessee, recorded in Volume 29, Page 525, Oil and Gas Records, Brazos County, Texas, SAVE AND EXCEPT Tract 2, described below.

Tract 2

3 acres, more or less, out of the J. M. Barrera Survey, A-68, Brazos County, Texas, being all of that certain tract described in Deed dated July 7, 1931, from Federal Trust Company, Independent Executor and Trustee of the Estate of R. N. Little to the State of Texas, acting through the State Highway Commission, recorded in Volume 80, Page 532, Deed Records, Brazos County, Texas.

Said tracts are more thoroughly described by metes and bounds on Exhibit A attached hereto (the "Subject Property") and outlined on the plat attached hereto as Exhibit C.

This Opinion is limited to the leasehold ownership in and to the Oil, Gas and Mineral Leases set forth below insofar as said leases cover the Subject Property and is based upon our examination of the following:

DOCUMENTS AND RECORDS EXAMINED

1. Photocopy of Drillsite Title Opinion dated August 20, 1980, prepared by Streit & Peterson, addressed to Salt Grass Exploration, Inc. and covering the Subject Property for the period of time from sovereignty of the soil to August 19, 1980 (time not stated).

2. Photocopy of Division Order Title Opinion dated October 27, 1981, prepared by Streit, Peterson & Sutton, L.L.P., addressed to Salt Grass Exploration, Inc., covering the Subject Property for the period of time from August 19, 1980 (time not stated) to June 11, 1981 (time not stated).

3. Photocopy of Supplemental Title Opinion dated November 20, 1992, prepared by Streit, Peterson & Sutton, L.L.P., addressed to Salt Grass Exploration, Inc., covering the Subject Property for the period of time from June 11, 1981, at 8:00 a.m., to October 30, 1992, at 5:00 p.m.

4. Review of the records of the County and District Clerks of Brazos County, Texas, conducted by Bill C. Boyd of Jackson & Walker, L.L.P., covering the Subject Property for the period of time from October 30, 1992, at 5:00 p.m., to July 28, 1993, at 5:00 p.m.

5. Photocopy of plat furnished by Seneca Resources Corporation, covering the Subject Property.

Subject to the Comments and Requirements hereinafter set forth and based solely upon the examination of the Documents and Records specified herein, we find title to the leasehold estate in the Subject Property vested as of July 28, 1993, at 5:00 p.m., as hereinafter set forth. Unless otherwise specified, all recording references in this Opinion are to the records of Burleson County, Texas.

Tract 1

	Operating Interest	Net Revenue Interest
Seneca Resources Corporation		
87.5% of 8/8, or	.875000	
87.5% of 72% of 8/8, or		.630000 L1-L3
R. S. Shawell		
12.5% of 8/8, or	.125000[1]	
12.5% of 72% of 8/8, or		.090000[1] L1-L3
TOTAL	1.000000	.720000

At such time as there is recovered and recouped from production from the Mills P. Walker Well No. 1 (test well) 100% of the costs of drilling, testing, completing, equipping, and operating said well, the overriding royalty interests credited to Pacific Cypress Minerals, Ltd. (.014584), H. L. Hawkins, Jr. (.010000), Midland Pipe Corp. (.005000) and Sanchez-O'Brien Oil & Gas Corporation (.005000) in the previous title opinions may be converted, at the option of each overriding royalty interest owner, to a pro rata share of 25% of the working interest. Assuming all overriding royalty interest owners will convert, upon "payout" the working interest will be owned as follows:

	Operating Interest	Net Revenue Interest
Seneca Resources Corporation		
65.625% of 8/8, or	.656250	
65.625% of 78.4584% of 8/8, less 87.5% of 60% of 5% of 8/8, or		.488635 L1-L3
R. S. Shawell		
9.375% of 8/8, or	.093750	

9.375% of 78.4584% of 8/8, less 12.5% of 60% of 5% of 8/8, or		.069806 L1-L3
W. C. Richardson		
6.25% of 8/8, or	.062500	
6.25% of 77.9167% of 8/8, or		.048697 L1-L3
Pacific Cypress Minerals, Ltd.		
6.25% of 8/8, or	.062500	
6.25% of 77.9167% of 8/8, or		.048698 L1-L3
H. L. Hawkins, Jr.		
6.25% of 8/8, or	.062500	
6.25% of 79% of 8/8, or		.049374 L1-L3
Proteus Petroleum, Inc.		
3.125% of 8/8, or	.031250	
3.125% of 79% of 8/8, or		.024687 L1-L3
Sanchez-O'Brien Oil & Gas Corporation, and its assignees		
3.125% of 8/8, or	.031250[2]	
3.125% of 79% of 8/8, or		.024687[2] L1-L3
TOTAL	1.000000	.754584

[1] See Comment and Requirement 4 below.
[2] See Comment and Requirement 2 below.

Tract 2

Fee title to Tract 2 is vested in the State of Texas. At present, Tract 2 is unleased. See Comment and Requirement 5 below.

SUMMARY OF THE LEASES

Lease 1 (L1)

Form:	Producers 88 (7/69)
Lessor:	Mills P. Walker
Lessee:	R. L. Reese
Dated:	December 16, 1977
Recorded:	Volume 29, Page 525, Oil and Gas Records, Brazos County, Texas
Description:	1,558 acres, including Tract 1 of the Subject Property
Primary term:	Five (5) years from date of Lease
Royalty:	Oil and gas, including casinghead gas and other gaseous substances, one-eighth (1/8); sulphur, $1.00 per long ton; all other minerals, one-tenth (1/10)
Delay Rental:	The sum of $2,058.75, payable to the credit of Lessor at United National Bank of Hill City, South Dakota, due annually on the anniversary date of said Lease
Shut-in Royalty:	Ninety (90) days after the well is shut in or the Lease ceases to be otherwise maintained, a sum equal to the delay rental provided herein and a like payment due on the anniversary date of said 90-day period
Pooling:	For oil, 80 acres plus 10% tolerance; for gas, 640 acres plus 10% tolerance
Unusual Provision:	Additional paragraph (12): Lease does not include coal, lignite, uranium, uranium ores, vanadium, plutonium or other fissionable materials

Lease 2 (L2)

Form:	Producers 88 (7-66)
Lessors:	John B. Dougherty and Lucille Dougherty, a feme sole
Lessee:	William C. Richardson
Dated:	February 15, 1978
Recorded:	Volume 30, Page 428, Oil and Gas Records, Brazos County, Texas
Description:	1,826 acres, including Tract 1 of the Subject Property
Primary term:	Five (5) years from date of Lease
Royalty:	Oil and gas, including casinghead gas and other gaseous substances, three-sixteenths (3/16)
Delay Rental:	The sum of $4,066.19, payable to the credit of Lessors at City National Bank of Bryan, Texas, due annually on the anniversary date of said Lease
Shut-in Royalty:	Ninety (90) days after the well is shut in or the Lease ceases to be otherwise maintained, a sum equal to the delay rental provided herein and a like payment due on the anniversary date of said 90-day period
Pooling:	For oil, 40 acres plus 10% tolerance; for gas, 640 acres plus 10% tolerance
Unusual Provisions:	Additional paragraphs: (A) Sets out interest owned by Lessors in each tract; (B) Limits the Lease to oil, gas and other liquid hydrocarbons only; (C) Contains the "Pugh clause" providing that operations or production from any portion of the Lease pooled with other lands will not maintain the

Lease as to lands not included in the Unit;

(D) Lease may be maintained by payment of shut-in gas payments for a period of no longer than two (2) years after the expiration of the primary term; and

(E) No surface operations will be conducted on the 17-acre tract described as Tract 4 in said Lease.

Lease 3 (L3)

Form:	Producers 88 (7-66)
Lessor:	John M. Lawrence, III, Trustee
Lessee:	William C. Richardson
Dated:	February 15, 1978
Recorded:	Volume 30, Page 432, Oil and Gas Records, Brazos County, Texas
Description:	1,809 acres, including Tract 1 of the Subject Property
Primary term:	Five (5) years from date of Lease
Royalty:	Oil and gas, including casinghead gas and other liquid hydrocarbons, three-sixteenths (3/16)
Delay Rental:	The sum of $710.06, payable to the credit of Lessor at First Bank & Trust of Bryan, Texas, due annually on the anniversary date of said Lease
Shut-in Royalty:	Ninety (90) days after the well is shut in or the Lease ceases to be otherwise maintained, a sum equal to the delay rental provided herein and a like payment due on the anniversary date of said 90-day period
Pooling:	For oil, 40 acres; for gas, 640 acres plus 10% tolerance

Unusual Provisions:

Additional paragraphs:

(A) Sets out interest owned by Lessor in each tract;

(B) Limits the Lease to oil, gas and other liquid hydrocarbons only;

(C) Contains the "Pugh clause" providing that operations or production from any portion of the Lease pooled with other lands will not maintain the Lease as to lands not included in the Unit; and

(D) Lease may be maintained by payment of shut-in gas payments for a period of no longer than two (2) years after the expiration of the primary term.

ENCUMBRANCES

Liens:

None of record.

Easements:

See Exhibit B attached hereto.

Taxes:

See Comment 3 below.

COMMENTS AND REQUIREMENTS

1.

This Opinion is based in part upon opinions of other counsel (Documents 1-3) and, therefore, is subject to the accuracy and completeness of such opinions. We cannot determine the accuracy and completeness of such opinions without examining the documents and records originally examined in the preparation of those opinions. Furthermore, this Opinion is subject to all of the comments and requirements contained in the opinions of other counsel. To the extent that the previous examiner determined that title requirements in the previous opinions were satisfied, we have relied on the prior examiner's judgment. Comments and requirements set forth in the previous opinions that have not been satisfied have been brought forward and restated herein.

REQUIREMENT:

None, advisory only.

2.

Comment and Requirement II of the Supplemental Title Opinion identified as Document 3 above reads as follows:

> It should be noted that Sanchez-O'Brien Oil & Gas Corporation has executed thirteen Assignments to various individuals conveying portions of the overriding royalty interest owned by Sanchez-O'Brien in the captioned property. Although it is not referred to in these Assignments, we are assuming that the Assignees will also participate in the right and option to convert said overriding royalty interest to a proportionate 25% working interest in the entire 1185 acre tract. The following is a list of the Assignees of Sanchez-O'Brien with the percentage of the Sanchez-O'Brien interest conveyed to each Assignee:

Sanchez-O'Brien Key Employees Royalty Trust	2.25%
George B. Bass	.25%
Minita M. Freeman	.50%
Robert Freeman	.50%
Richard E. Garza	.25%
Jose Roberto Gutierrez	.50%
George T. Karabatsos	.25%
Armando Medria	.50%
J. Byron Moore	.50%
Leonard J. Raiblo	.50%
R. W. Van Zanten	.50%
Vicente Vera	.25%

> Requirement: None, advisory only. It is our understanding that the Mills P. Walker Well No. 1 has not paid out (see Comment IV below) and the ownership listing set out above is based upon the "before payout" status. At such time as the Mills P. Walker Well No. 1 pays out, it will be necessary to determine whether or not the Sanchez-O'Brien Assignees acquired the option to convert their proportionate overriding royalty interest to a working interest as set out above.

REQUIREMENT:

None, advisory only. Although we have not examined the thirteen assignments executed by Sanchez-O'Brien Oil & Gas Corporation, it appears from the prior examiner's comment that such assignments did not specifically deny the right of the assignees

to convert their respective overriding royalty interests. If such is the case, it is our opinion that all rights appurtenant to the interests conveyed to the assignees, including the right of conversion, passed to the assignees.

3.

Comment and Requirement VII of the Supplemental Title Opinion identified as Document 3 above reads as follows:

> We have been furnished with no information with reference to the payment of ad valorem taxes on the leasehold interest set out above.
>
> Requirement: You should satisfy yourself that the ad valorem taxes assessed against this leasehold interest have been paid through 1991.

REQUIREMENT:

Obtain from the tax assessor-collector of Washington County, Texas, and from the tax assessor-collector of any other political subdivision within which the Subject Property lies and which has taxing jurisdiction thereover, and furnish for examination tax receipts or other certificates evidencing that state, county, school and other taxes levied against the leasehold estate in the Subject Property have been paid for all years up to and including 1992.

4.

The Assignment and Bill of Sale from R. S. Shawell to Seneca Resources Corporation, dated June 18, 1993, recorded in Volume 1855, Page 175, Official Records, contains the following reservation, to wit:

> Assignor expressly reserves and excepts from the assignment and conveyance herein to Assignee a working interest equal to twelve and one-half percent (12.5%) of the current leasehold working interest in the Subject Leases "carried through the tanks" with respect to (1) all re-entry, deepening, sidetracking, workover and/or completion costs associated with operations on the only existing producing well on the Subject Leases (the M. P. Walker No. 1 Well), and (2) all costs and expenses related to the drilling, completing and equipping of any new well on the Subject Leases. For purposes hereof, "carried through the tanks" shall mean that Assignee shall bear and pay all costs and expenses and shall absorb all liability attributable to Assignor's reserved carried working interest with respect to operations on any well on the Subject Property until any such well

is drilled, completed and equipped with all necessary production equipment including all necessary storage tanks, or to the pipeline connection if no tankage is installed.

REQUIREMENT:

None, advisory only.

5.

By Deed dated July 7, 1931, recorded in Volume 80, Page 532, Deed Records, Federal Trust Company "granted, sold and conveyed" unto the State of Texas, acting through the State Highway Commission, that certain 3 acre tract identified as Tract 2, herein. The prior examiner in Document 1 treated this conveyance as creating a mere easement in favor of the State of Texas, apparently based on the fact that the deed contains the recitation that the tract was to be used for "right-of-way" purposes. However, the Supreme Court in *Texas Elec. Ry. Co. v. Neale*, 252 S.W.2d 451 (1952) held that subsequent recitals as to use do not operate to limit the grant to a mere easement, if the granting clause conveys fee title to the land. It is our opinion therefore that fee title to Tract 2 was conveyed to the State of Texas, and therefore such tract is not covered by the Subject Lease.

REQUIREMENT:

Secure and file for record an Oil, Gas and Mineral Lease from the State of Texas covering Tract 2 of the Subject Property. At the time of such recordation, a supplemental check of the records from the closing date of this Opinion should be made in order to make certain that no adverse interests have been filed of record.

6.

The Subject Leases are beyond their respective primary terms. We have assumed, for purposes of this Opinion, that the Subject Leases have been maintained in full force and effect in accordance with their terms by shut-in royalties, drilling operations, production or otherwise.

REQUIREMENT:

None, advisory only.

7.

You must locate and respect the easements described on Exhibit B and conduct your operations on the Subject Property accordingly.

REQUIREMENT:

None, advisory only.

8.

The tabulation of interest in and to the Subject Property herein is limited to the oil and gas leasehold estate. Specifically excluded from this Opinion is a tabulation of ownership of the fee mineral and royalty estates and the surface estates in the Subject Property, including the ownership of uranium, coal, lignite, and other hard minerals.

REQUIREMENT:

None, advisory only.

9.

This Opinion does not cover any matter of conflict or discrepancy with respect to survey, area or boundary.

REQUIREMENT:

None, advisory only; however, if an opinion on these matters is desired, we should be furnished with a surveyor's plat and report for examination and further opinion.

10.

Of necessity, this Opinion is subject to any applicable bankruptcy or insolvency laws, liens for taxes not yet due, statutory and constitutional mechanic's and materialman's liens not of record, operator's liens not of record, statutory liens securing payment of proceeds of production from the Subject Property, enforcement of regulations or orders by any governmental authority having jurisdiction over the Subject Property, capacity or competency of parties, fraud, delivery and alteration after delivery.

REQUIREMENT:

None, advisory only.

11.

This Opinion does not cover any matters relating to compliance with or violation of any federal, state or local environmental laws or regulations, nor to any matters relating to compliance with or violation of any orders, decrees, judgments, injunctions, notices or demands issued, entered, promulgated or approved under any such environmental laws or regulations unless included in the Documents and Records described above.

REQUIREMENT:

None, advisory only.

12.

Section 91.401, *et seq.*, of the Texas Natural Resources Code, as amended by Senate Bill 1605, effective August 26, 1991, provides certain time periods for payment of all proceeds from the sale of production from oil or gas wells located in the state. Payment must be made within 120 days after the end of the month of first sale of production from the well. Thereafter, payment must be made within 60 days after the end of the calendar month in which subsequent oil production is sold and within 90 days for gas production. If the amount owed is $25.00 or less, then payment may be made every 12 months. If payments are not made within the specified time period, then the payor must pay interest on the amounts due.

Payments may be suspended and the interest penalties will not be incurred if there is:

(1) a dispute concerning title that would affect distribution of payments;

(2) a reasonable doubt that the payee:

(a) has sold or authorized the sale of its share of the oil or gas to the purchaser of such production; or

(b) has clear title to the interest in proceeds of production; or

(3) a requirement in a title opinion that places in issue the title, identity or whereabouts of the payee and that has not been satisfied by the payee after a reasonable request for curative information has been made by the payor.

REQUIREMENT:

None, advisory only.

13.

This Second Supplemental Title Opinion is rendered solely and exclusively for the benefit of Seneca Resources Corporation and is not to be quoted in whole or in part, nor is it to be relied upon by any other person without the prior written consent of this firm.

REQUIREMENT:

None, advisory only.

Very truly yours,

Jackson + Walker, L.L.P.

JACKSON & WALKER, L.L.P.

BCB/ppc

EXHIBIT B

To Second Supplemental Title Opinion
Dated August 6, 1993
Addressed to Seneca Resources Corporation
Covering 1,185 Acres, Brazos County, Texas

Easements

(Per Drillsite Title Opinion identified as Document 1)

1. Easement dated April 15, 1947, executed by E. E. Allen to Gulf States Utilities Company (129/498 DR), covering a right of way for electrical transmission lines.

2. Easement dated February 27, 1950, executed by E. E. Allen to the City of Bryan (141/544 DR), for an electrical transmission right of way.

EXHIBIT A

To Second Supplemental Title Opinion
Dated August 6, 1993
Addressed to Seneca Resources Corporation
Covering 1,185 Acres, Brazos County, Texas

Metes and Bounds Description

Tract 1: 1,182 acres

BEGINNING at the northwest corner of the Andrew D. Houston Survey, A-133, at a marker and established corner of the José Maria Barrera Grant;
THENCE East with the north line of the Andrew D. Houston Grant 2,677 varas to a stake for corner;
THENCE South 1,772 varas to a stake for corner;
THENCE West 933 varas and corner a stake for corner;
THENCE South 353 varas to a stake from which an elm 8" in diameter bears south 8 deg. west 5 varas for corner;
THENCE West 160 varas to a dead mulberry 16" in diameter for corner;
THENCE South 454 varas to a stake for corner;
THENCE West 1,118 varas to a stake for corner;
THENCE North 1,238 varas to a stake for corner;
THENCE West 455 varas to a stake for corner in the west line of the Andrew D. Houston Grant;
THENCE North with the west line of said Grant 321 varas to a stake for corner;
THENCE West 1,050 varas to a stake for corner;
THENCE South 867 varas to a stake for corner;
THENCE West 207 varas to corner;
THENCE North 950 varas to a stake for corner;
THENCE East 27 varas to a stake for corner;
THENCE North 937 varas to a stake for corner on the north line of the José Maria Barrera Tract or Grant;
THENCE East with the north line of the Barrera Grant 1,230 varas to the PLACE OF BEGINNING, containing 1,185 acres, more or less.

SAVE AND EXCEPT Tract 2 described below.

Tract 2: 3 acres

Being situated in the J. M. Barrera Survey; beginning at a point which is on the east line of the Little tract where it bounds the W. K. Symms tract, said point being 450 feet north of the west corner of the H. G. Hudson survey and 50 feet from the center of the proposed highway; at station 1172 plus 50;

THENCE due north along the Hudson-Barrerra Survey line a distance of 124 feet to a point which is 50 feet from the center of the proposed highway;

THENCE north 38-23 west along a line parallel to and 50 feet from the center of the proposed highway a distance of 232 feet;

THENCE following a 1 degree curve to the left a distance of 783 feet;

THENCE north 46-13 west a distance of 190 feet;

THENCE due south along a fence line a distance of 124 feet to a point which is 50 feet from the center of the proposed highway;

THENCE south 46-13 east a distance of 127 feet;

THENCE following a 1 degree curve to the right a distance of 783 feet;

THENCE south 38-23 east along a line parallel to and 50 feet from the center of the proposed road a distance of 395 feet to the place of beginning, and containing three (3) acres of land.

EXHIBIT C

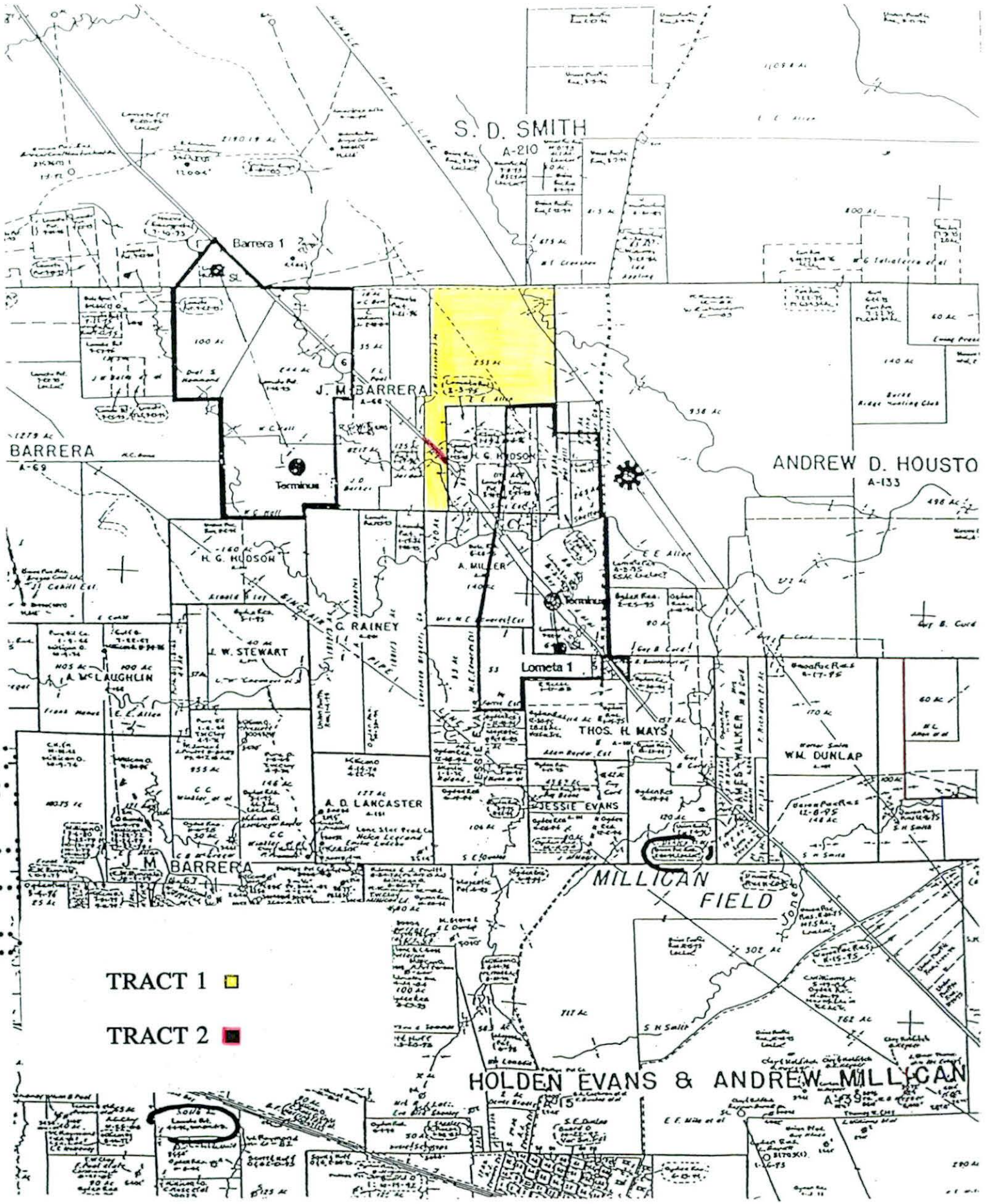

EXHIBIT C

M-95380 (9)

title opinion

8-6-93

29/52 5

Producers 88 (7-69)
With 640 Acres Pooling Provision

POUND PRINTING & STATIONERY COMPANY
2325 FANNIN, HOUSTON, TEXAS 77002, (713) 659-3159

OIL, GAS AND MINERAL LEASE

THIS AGREEMENT made this 16 day of December 19 77, between

Mills P. Walker

lessor (whether one or more), whose address is: Box 617 Hill City, South Dakota 57745

and R. L. Reese, lessee, WITNESSETH:

1. Lessor, in consideration of ----------Ten and No/100----------Dollars, receipt of which is hereby acknowledged, and of the covenants and agreements of lessee hereinafter contained, does hereby grant, lease and let unto lessee the land covered hereby for the purposes and with the exclusive right of exploring, drilling, mining and operating for, producing and owning oil, gas, sulphur and all other minerals (whether or not similar to those mentioned), together with the right to make surveys on said land, lay pipe lines, establish and utilize facilities for surface or subsurface disposal of salt water, construct roads and bridges, dig canals, build tanks, power stations, telephone lines, employee houses and other structures on said land, necessary or useful in lessee's operations in exploring, drilling for, producing, treating, storing and transporting minerals produced from the land covered hereby or any other land adjacent thereto. The land covered hereby, herein called "said land", is located in the County of Brazos, State of Texas, and is described as follows:

First Tract: 371 acres, more or less, out of the S.W. Robertson Survey A-202, being the same land described in that certain Mineral Deed from D. Mike to Mills P. Walker dated April 8, 1932, recorded in volume 81 at page 528 of the Deed Records of Brazos County, Texas.

Second Tract: 1187 acres, more or less, out of the Andrew Houston Survey A-133 and J. Barrera Survey A-68, being the same land described in that certain Mineral Deed from M.P. Walker to D. Mike dated January 14, 1932 recorded in volume 81 at page 242 of the Deed Records of Brazos County, Texas.

FILED FOR RECORD
DATE 1-18-78
AT 11:45 O'CLOCK A M
FRANK DORISKIE
BRAZOS COUNTY CLERK
BY Mattie Nowak

DATE RECORDED 1-20-78

138073

This lease also covers and includes, in addition to that above described, all land, if any, contiguous or adjacent to or adjoining the land above described and (a) owned or claimed by lessor by limitation, prescription, possession, reversion or unrecorded instrument or (b) as to which lessor has a preference right of acquisition. Lessor agrees to execute any supplemental instrument requested by lessee for a more complete or accurate description of said land. For the purpose of determining the amount of any bonus, delay rental or other payment hereunder, said land shall be deemed to contain 1558 acres, whether actually containing more or less, and the above recital of acreage in any tract shall be deemed to be the true acreage thereof. Lessor accepts the bonus and agrees to accept the delay rental as lump sum considerations for this lease and all rights and options hereunder.

2. Unless sooner terminated or longer kept in force under other provisions hereof, this lease shall remain in force for a term of five (5) years from the date hereof, hereinafter called "primary term", and as long thereafter as operations, as hereinafter defined, are conducted upon said land with no cessation for more than ninety (90) consecutive days.

3. As royalty, lessee covenants and agrees: (a) To deliver to the credit of lessor, in the pipe line to which lessee may connect its wells, the equal one-eighth part of all oil produced and saved by lessee from said land, or from time to time, at the option of lessee, to pay lessor the average posted market price of such one-eighth part of such oil at the wells as of the day it is run to the pipe line or storage tanks, lessor's interest, in either case, to bear one-eighth of the cost of treating oil to render it marketable pipe line oil; (b) To pay lessor on gas and casinghead gas produced from said land (1) when sold by lessee, one-eighth of the amount realized by lessee, computed at the mouth of the well, or (2) when used by lessee off said land or in the manufacture of gasoline or other products, the market value, at the mouth of the well, of one-eighth of such gas and casinghead gas; (c) To pay lessor on all other minerals mined and marketed or utilized by lessee from said land, one-tenth either in kind or value at the well or mine at lessee's election, except that on sulphur mined and marketed the royalty shall be one dollar ($1.00) per long ton. If, at the expiration of the primary term or at any time or times thereafter, there is any well on said land or on lands with which said land or any portion thereof has been pooled, capable of producing oil or gas, and all such wells are shut-in, this lease shall, nevertheless, continue in force as though operations were being conducted on said land for so long as said wells are shut-in, and thereafter this lease may be continued in force as if no shut-in had occurred. Lessee covenants and agrees to use reasonable diligence to produce, utilize, or market the minerals capable of being produced from said wells, but in the exercise of such diligence, lessee shall not be obligated to install or furnish facilities other than well facilities and ordinary lease facilities of flow lines, separator, and lease tank, and shall not be required to settle labor trouble or to market gas upon terms unacceptable to lessee. If, at any time or times after the expiration of the primary term, all such wells are shut-in for a period of ninety consecutive days, and during such time there are no operations on said land, then at or before the expiration of said ninety day period, lessee shall pay or tender, by check or draft of lessee, as royalty, a sum equal to the amount of annual delay rental provided for in this lease. Lessee shall make like payments or tenders at or before the end of each anniversary of the expiration of said ninety day period if upon such anniversary this lease is being continued in force solely by reason of the provisions of this paragraph. Each such payment or tender shall be made to the parties who at the time of payment would be entitled to receive the royalties which would be paid under this lease if the wells were producing, and may be deposited in a depository bank provided for below. Nothing herein shall impair lessee's right to release as provided in paragraph 5 hereof. In event of assignment of this lease in whole or in part, liability for payment hereunder shall rest exclusively on the then owner or owners of this lease, severally as to acreage owned by each.

4. Lessee is hereby granted the right, at its option, to pool or unitize any land covered by this lease with any other land covered by this lease, and/or with any other land, lease, or leases, as to any or all minerals or horizons, so as to establish units containing not more than 80 surface acres, plus 10% acreage tolerance; provided, however, units may be established as to any one or more horizons, or existing units may be enlarged as to any one or more horizons, so as to contain not more than 640 surface acres plus 10% acreage tolerance, if limited to one or more of the following: (1) gas, other than casinghead gas, (2) liquid hydrocarbons (condensate) which are not liquids in the subsurface reservoir, (3) minerals produced from wells classified as gas wells by the conservation agency having jurisdiction. If larger units than any of those herein permitted, either at the time established, or after enlargement, are required under any governmental rule or order, for the drilling or operation of a well at a regular location, or for obtaining maximum allowable from any well to be drilled, drilling, or already drilled, any such unit may be established or enlarged to conform to the size required by such governmental order or rule. Lessee shall exercise said option as to each desired unit by executing an instrument identifying such unit and filing it for record in the public office in which this lease is recorded. Each of said options may be exercised by lessee at any time and from time to time while this lease is in force, and whether before or after production has been established either on said land, or on the portion of said land included in the unit, or on other land unitized therewith. A unit established hereunder shall be valid and effective for all purposes of this lease even though there may be mineral, royalty, or leasehold interests in lands within the unit which are not effectively pooled or unitized. Any operations conducted on any part of such unitized land shall be considered, for all purposes, except the payment of royalty, operations conducted upon said land under this lease. There shall be allocated to the land covered by this lease within each such unit (or to each separate tract within the unit if this lease covers separate tracts within the unit) that proportion of the total production of unitized minerals from the unit, after deducting any used in lease or unit operations, which the number of surface acres in such land (or in each such separate tract) covered by this lease within the unit bears to the total number of surface acres in the unit, and the production so allocated shall be considered for all purposes, including payment or delivery of royalty, overriding royalty and any other payments out of production, to be the entire production of unitized minerals from the land to which allocated in the same manner as though produced therefrom under the terms of this lease. The owner of the reversionary estate of any term royalty or mineral estate agrees that the accrual of royalties pursuant to this paragraph or of shut-in royalties from a well on the unit shall satisfy any limitation of term requiring production of oil or gas. The formation of any unit hereunder which includes land not covered by this lease shall not have the effect of exchanging or transferring any interest under this lease (including, without limitaton, any delay rental and shut-in royalty which may become payable under this lease) between parties owning interests in land covered by this lease and parties owning interests in land not covered by this lease. Neither shall it impair the right of lessee to release as provided in paragraph 5 hereof, except that lessee may not so release as to lands within a unit while there are operations thereon for unitized minerals unless all pooled leases are released as to lands within the unit. At any time while this lease is in force lessee may dissolve any unit established hereunder by filing for record in the public office where this lease is recorded a declaration to that effect, if at that time no operations are being conducted thereon for unitized minerals. Subject to the provisions of this paragraph 4, a unit once established hereunder shall remain in force so long as any lease subject thereto shall remain in force. If this lease now or hereafter covers separate tracts, no pooling or unitization of royalty interests as between any such separate tracts is intended or shall be implied or result merely from the inclusion of such separate tracts within this lease but lessee shall nevertheless have the right to pool or unitize as provided in this paragraph 4 with consequent allocation of production as herein provided. As used in this paragraph 4, the words "separate tract" mean any tract with royalty ownership differing, now or hereafter, either as to parties or amounts, from that as to any other part of the leased premises.

5. If operations are not conducted on said land on or before the first anniversary date hereof, this lease shall terminate as to both parties, unless lessee on or before said date shall, subject to the further provisions hereof, pay or tender to lessor or to lessor's credit in the UNITED NATIONAL Bank at BOX 126, HILL CITY, or its successors, which shall continue as the depository, regardless of changes in ownership of delay rental, royalties, or other moneys, the sum of $ 2,058.75, which shall operate as delay rental and cover the privilege of deferring operations for one year from said date. In like manner and upon like payments or tenders, operations may be further deferred for like periods of one year each during the primary term. If at any time that lessee pays or tenders delay rental, royalties, or other moneys, two or more parties are, or claim to be, entitled to receive same, lessee may, in lieu of any other method of payment herein provided, pay or tender such rental, royalties, or other moneys, in the manner herein specified, either jointly to such parties or separately to each in accordance with their respective ownerships thereof, as lessee may elect. Any payment hereunder may be made by check or draft of lessee deposited in the mail or delivered to lessor or to a depository bank on or before the last date for payment. Said delay rental shall be apportionable as to said land on an acreage basis, and a failure to make proper payment or tender of delay rental as to any portion of said land or as to any interest therein shall not affect this lease as to any portion of said land or as to any interest therein as to which proper payment or tender is made. Any payment or tender which is made in an attempt to make proper payment, but which is erroneous in whole or in part as to parties, amounts, or depository shall nevertheless be sufficient to prevent termination of this lease and to extend the time within which operations may be conducted in the same manner as though a proper payment had been made; provided, however, lessee shall correct such [illegible]

oil, gas, sulphur or other mineral, whether or not in paying quantities.

7. Lessee shall have the use, free from royalty, of water, other than from lessor's water wells, and of oil and gas produced from said land in all operations hereunder. Lessee shall have the right at any time to remove all machinery and fixtures placed on said land, including the right to draw and remove casing. No well shall be drilled nearer than 200 feet to the house or barn now on said land without the consent of the lessor. Lessee shall pay for damages caused by its operations to growing crops and timber on said land.

8. The rights and estate of any party hereto may be assigned from time to time in whole or in part and as to any mineral or horizon. All of the covenants, obligations, and considerations of this lease shall extend to and be binding upon the parties hereto, their heirs, successors, assigns, and successive assigns. No change or division in the ownership of said land, royalties, delay rental, or other moneys, or any part thereof, howsoever effected, shall increase the obligations or diminish the rights of lessee, including, but not limited to, the location and drilling of wells and the measurement of production. Notwithstanding any other actual or constructive knowledge or notice thereof of or to lessee, its successors or assigns, no change or division in the ownership of said land or of the royalties, delay rental, or other moneys, or the right to receive the same, howsoever effected, shall be binding upon the then record owner of this lease until thirty (30) days after there has been furnished to such record owner at his or its principal place of business by lessor or lessor's heirs, successors, or assigns, notice of such change or division, supported by either originals or duly certified copies of the instruments which have been properly filed for record and which evidence such change or division, and of such court records and proceedings, transcripts, or other documents as shall be necessary in the opinion of such record owner to establish the validity of such change or division. If any such change in ownership occurs by reason of the death of the owner, lessee may, nevertheless pay or tender such royalties, delay rental, or other moneys, or part thereof, to the credit of the decedent in a depository bank provided for above. In the event of assignment of this lease as to any part (whether divided or undivided) of said land, the delay rental payable hereunder shall be apportionable as between the several leasehold owners, ratably according to the surface area or undivided interests of each, and default in delay rental payment by one shall not affect the right of other leasehold owners hereunder.

9. In the event lessor considers that lessee has not complied with all its obligations hereunder, both express and implied, lessor shall notify lessee in writing, setting out specifically in what respects lessee has breached this contract. Lessee shall then have sixty (60) days after receipt of said notice within which to meet or commence to meet all or any part of the breaches alleged by lessor. The service of said notice shall be precedent to the bringing of any action by lessor on said lease for any cause, and no such action shall be brought until the lapse of sixty (60) days after service of such notice on lessee. Neither the service of said notice nor the doing of any acts by lessee aimed to meet all or any of the alleged breaches shall be deemed an admission or presumption that lessee has failed to perform all its obligations hereunder. If this lease is cancelled for any cause, it shall nevertheless remain in force and effect as to (1) sufficient acreage around each well as to which there are operations to constitute a drilling or maximum allowable unit under applicable governmental regulations, (but in no event less than forty acres), such acreage to be designated by lessee as nearly as practicable in the form of a square centered at the well, or in such shape as then existing spacing rules require; and (2) any part of said land included in a pooled unit on which there are operations. Lessee shall also have such easements on said land as are necessary to operations on the acreage so retained.

10. Lessor hereby warrants and agrees to defend title to said land against the claims of all persons whomsoever. Lessor's rights and interests hereunder shall be charged primarily with any mortgages, taxes or other liens, or interest and other charges on said land, but lessor agrees that lessee shall have the right at any time to pay or reduce same for lessor, either before or after maturity, and be subrogated to the rights of the holder thereof and to deduct amounts so paid from royalties or other payments payable or which may become payable to lessor and/or assigns under this lease. If this lease covers a less interest in the oil, gas, sulphur, or other minerals in all or any part of said land than the entire and undivided fee simple estate (whether lessor's interest is herein specified or not), or no interest therein, then the royalties, delay rental, and other moneys accruing from any part as to which this lease covers less than such full interest, shall be paid only in the proportion which the interest therein, if any, covered by this lease, bears to the whole and undivided fee simple estate therein. All royalty interest covered by this lease (whether or not owned by lessor) shall be paid out of the royalty herein provided. This lease shall be binding upon each party who executes it without regard to whether it is executed by all those named herein as lessor.

11. If, while this lease is in force, at, or after the expiration of the primary term hereof, it is not being continued in force by reason of the shut-in well provisions of paragraph 3 hereof, and lessee is not conducting operations on said land by reason of (1) any law, order, rule or regulation, (whether or not subsequently determined to be invalid) or (2) any other cause, whether similar or dissimilar, (except financial) beyond the reasonable control of lessee, the primary term and the delay rental provisions hereof shall be extended until the first anniversary date hereof occurring ninety (90) or more days following the removal of such delaying cause, and this lease may be extended thereafter by operations as if such delay had not occurred.

12. This lease does not cover or include coal, lignite, uranium, uranium ores, vanadium, plutonium or other fissionable materials or minerals, and such materials or minerals are excepted from this lease and reserved to lessor, their heirs and assigns, and it is understood and expressly provided that the term "other minerals" whenever and wherever used in this lease shall not refer to and include the materials and minerals cited in this paragraph.

Signed for Identification: Mills P. Walker [redacted]
by Mildred L. Walker, power of atty.
Mills P. Walker Soc. Sec. No.

~~VOL 29 PAGE 526~~

not occurred.

IN WITNESS WHEREOF, this instrument is executed on the date first above written.

Mills P. Walker Soc. Sec. No.

[redacted]

Mills P. Walker
by Velma I. Walker

Mary A. Owen Cooper

STATE OF SOUTH DAKOTA
COUNTY OF PENNINGTON

INDIVIDUAL ACKNOWLEDGMENT—TEXAS OR NEW MEXICO

Before me, the undersigned authority, on this day personally appeared VELMA I WALKER, POWER OF ATTORNEY FOR MILLS P. WALKER

known to me to be the person whose name is (are) subscribed to the foregoing instrument, and acknowledged to me that executed the same as a free act and deed for the purposes and consideration therein expressed.

Given under my hand and seal of office this 22ND day of DECEMBER, 1977.

My Commission Expires
DEC. 28, 1978

Notary Public in and for PENNINGTON County, State of SO. DAK.

STATE OF
COUNTY OF

INDIVIDUAL ACKNOWLEDGMENT—TEXAS OR NEW MEXICO

Before me, the undersigned authority, on this day personally appeared

known to me to be the person whose name is (are) subscribed to the foregoing instrument, and acknowledged to me that executed the same as free act and deed for the purposes and consideration therein expressed.

Given under my hand and seal of office this day of , 19 .

My Commission Expires

Notary Public in and for County, State of

STATE OF
COUNTY OF

HUSBAND AND WIFE ACKNOWLEDGMENT—TEXAS OR NEW MEXICO

Before me, the undersigned authority, on this day personally appeared

and husband and wife, known to me to be the persons whose names are subscribed to the foregoing instrument, and acknowledged to me that they executed the same as their free act and deed for the purposes and consideration therein expressed.

Given under my hand and seal of office this day of , 19 .

My Commission Expires

Notary Public in and for County, State of

Producers 88 (7-69)
With 640 Acres Pooling Provision

No.

Oil, Gas and M

FROM

TO

Dated

No. Acres

Term

This instrument was filed for

day of

o'clock

Book

of the records of

By

When recorded re

R. R. D.

Pound Printing & Stationery

THE STATE OF TEXAS)
COUNTY OF BRAZOS)

I, Mary Ann Ward, County Clerk of Brazos County, Texas do hereby certify that the foregoing is a true and correct copy of the original as the same appears of record in Vol. 29 Page 535 in Deed Records of said County on file in my office.

ATTEST 8-9-93

Mary Ann Ward, County Clerk
Brazos County, Texas
By Gresa Palomar Deputy

Producers 88 (7-66)
With 640 Acres Pooling Provision

VOL 30 PAGE 428

Houston Blueprint & Stationery Co.

OIL, GAS AND MINERAL LEASE

THIS AGREEMENT made this 15th day of February 19 78, between John B. Dougherty and Lucille Dougherty, a femme sole

Lessor (whether one or more), whose address is: Box 215, Bryan, Texas 77801
and Wm. C. Richardson, 3131 Briarpark, Houston, Texas, Lessee, WITNESSETH:

1. Lessor in consideration of Ten and no/100 Dollars ($ 10.00), in hand paid, of the royalties herein provided, and of the agreements of Lessee herein contained, hereby grants, leases and lets exclusively unto Lessee for the purpose of investigating, exploring, prospecting, drilling and mining for and producing oil, gas and all other minerals, conducting exploration, geologic and geophysical surveys by seismograph, core test, gravity and magnetic methods, injecting gas, water and other fluids, and air into subsurface strata, laying pipe lines, building roads, tanks, power stations, telephone lines and other structures thereon and on, over and across lands owned or claimed by Lessor adjacent and contiguous thereto, to produce, save, take care of, treat, transport and own said products, and housing its employees, the following described land in Brazos County, Texas, to-wit:

First Tract: 371 acres, more or less, out of the S.W. Robertson Survey A-202, being the same land described in that certain Mineral Deed from D. Mike to Mills P. Walker dated April 8, 1932, recorded in Volume 81 at page 528 of the Deed Recordes of Brazos County, Texas.

Second Tract: 1168 acres, more or less, out of the Andrew Houston Survey A-133 and J. Barrera Survey A-68, being the same land described in that certain Mineral Deed from M.P. Walker to D. Mike dated January 14, 1932 recorded in Volume 81 at page 242 of the Deed Records of Brazos County, Texas, which deed described 1185 acres and excepted 17 acres, more or less.

Third Tract: 270 acres, more or less, out of the James Gray Survey, A-250, as more particularly described in deed dated July 30, 1920 from J.T. Swanson to D. Mike, recorded in Volume 54 at page 289 of the deed records of Brazos County, Texas.

Fourth Tract: 17 acres, more or less out of the J.M. Barrera Survey, A-68, lying southwest of Highway No. 6, and being the same 17 acres excepted in deed dated January 14, 1932 from M.P. Walker to D. Mike, recorded in Volume 81 at page 242 of the deed records of Brazos County, Texas, and being further described in the second paragraph of deed dated January 14, 1932 from M. P. Walker to D. Mike, recorded in Volume 81 at page 235 of the deed records of Brazos County, Texas.

140303

FILED
At 10 o'clock A.M.
MAR 3 1978
FRANK BORISKIE
County Clerk, Brazos County, Bryan, Texas
By _____ Deputy

John B. Dougherty
Lucille Dougherty

Date Recorded 3-10-78

This lease also covers and includes all land owned or claimed by Lessor adjacent or contiguous to the land particularly described above, whether the same be in said survey or surveys or in adjacent surveys, although not included within the boundaries of the land particularly described above. For the purpose of calculating the rental payments hereinafter provided for, said land is estimated to comprise 1826 acres, whether it actually comprises more or less.

2. Subject to the other provisions herein contained, this lease shall be for a term of ~~ten~~ five years from this date (called "primary term") and as long thereafter as oil, gas or other mineral is produced from said land or land with which said land is pooled hereunder.

3/16 3. The royalties to be paid by Lessee are: (a) on oil, one-eighth of that produced and saved from said land, the same to be delivered at the wells or to the credit of Lessor into the pipelines to which the wells may be connected; Lessee may from time to time purchase any royalty oil in its possession, paying the market price therefor prevailing for the field where produced on the date of purchase; (b) on gas, including casinghead gas or other gaseous substance, produced from said land and sold or used off the premises or for the extraction of gasoline or other product therefrom, the market value at the well of one-eighth of the gas so sold or used, provided that on gas sold at the wells the royalty shall be one-eighth of the amount realized from such sale; while there is a gas well on this lease or on acreage pooled therewith but gas is not being sold or used, Lessee may pay as royalty, on or before ninety (90) days after the date on which (1) said well is shut in, or (2) the land covered hereby or any portion thereof is included in a pooled unit on which a well is located, or (3) this lease ceases to be otherwise maintained as provided herein, whichever is the later date, and thereafter at annual intervals on or before the anniversary of the date the first payment is made, a sum equal to the amount of the annual rental payable in lieu of drilling operations during the primary term on the number of acres subject to this lease at the time such payment is made, and if such payment is made or tendered, this lease shall not terminate, and it will be considered that gas is being produced from this lease in paying quantities; and (c) on all other minerals mined and marketed, one-tenth either in kind or value at the well or mine, at Lessee's election, except that on sulphur mined and marketed the royalty shall be fifty cents (50¢) per long ton. Lessee shall have free use of oil, gas, coal, and water from said land, except water from Lessor's wells, for all operations hereunder, and the royalty on oil, gas and coal shall be computed after deducting any so used. 3/16

4. Lessee, at its option, is hereby given the right and power to pool or combine the acreage covered by this lease or any poriton thereof as to oil and gas, or either of them, with any other land covered by this lease, and/or with any other land, lease or leases in the immediate vicinity thereof to the extent hereinafter stipulated, when in Lessee's judgment it is necessary or advisable to do so in order properly to explore, or to develop and operate said leased premises in compliance with the spacing rules of the Railroad Commission of Texas, or other lawful authority, or when to do so would, in the judgment of Lessee, promote the conservation of oil and gas in and under and that may be produced from said premises. Units pooled for oil hereunder shall not substantially exceed 40 acres each in area, and units pooled for gas hereunder shall not substantially exceed in area 640 acres each plus a tolerance of ten percent (10%) thereof, provided that should governmental authority having jurisdiction prescribe or permit the creation of units larger than those specified, for the drilling or operation of a well at a regular location or for obtaining maximum allowable from any well to be drilled, drilling or already drilled, units thereafter created may conform substantially in size with those prescribed or permitted by governmental regulations. Lessee under the provisions hereof may pool or combine acreage covered by this lease or any portion thereof as above provided as to oil in any one or more strata and as to gas in any one or more strata. The units formed by pooling as to any stratum or strata need not conform in size or area with the unit or units into which the lease is pooled or combined as to any other stratum or strata, and oil units need not conform as to area with gas units. The pooling in one or more instances shall not exhaust the rights of the Lessee hereunder to pool this lease or portions thereof into other units. Lessee shall file for record in the appropriate records of the county in which the leased premises are situated an instrument describing and designating the pooled acreage as a pooled unit; and upon such recordation the unit shall be effective as to all parties hereto, their heirs, successors, and assigns, irrespective of whether or not the unit is likewise effective as to all other owners of surface, mineral, royalty, or other rights in land included in such unit. Lessee may at its election exercise its pooling option before or after commencing operations for or completing an oil or gas well on the leased premises, and the pooled unit may include, but it is not required to include, land or leases upon which a well capable of producing oil or gas in paying quantities has theretofore been completed or upon which operations for the drilling of a well for oil or gas have theretofore been commenced. In the event of operations for drilling on or production of oil or gas from any part of a pooled unit which includes all or a portion of the land covered by this lease, regardless of whether such operations for drilling were commenced or such production was secured before or after the execution of this instrument or the instrument designating the pooled unit, such operations shall be considered as operations for drilling on or production of oil or gas from land covered by this lease whether or not the well or wells be located on the premises covered by this lease and in such event operations for drilling shall be deemed to have been commenced on said land within the meaning of paragraph 5 of this lease; and the entire acreage constituting such unit or units, as to oil and gas, or either of them, as herein provided, shall be treated for all purposes, except the payment of royalties on production from the pooled unit, as if the same were included in this lease. For the purpose of computing the royalties to which owners of royalties and payments out of production and each of them shall be entitled on production of oil and gas, or either of them, from the pooled unit, there shall be allocated to the land covered by this lease and included in said unit (or to each separate tract within the unit if this lease covers separate tracts within the unit) a pro rata portion of the oil and gas, or either of them, produced from the pooled unit after deducting that used for operations on the pooled unit. Such allocation shall be on an acreage basis—that is to say, there shall be allocated to the acreage covered by this lease and included in the pooled unit (or to each separate tract within the unit if this lease covers separate tracts within the unit) that pro rata portion of the oil and gas, or either of them, produced from the pooled unit which the number of surface acres covered by this lease (or in each such separate tract) and included in the pooled unit bears to the total number of surface acres included in the pooled unit. Royalties hereunder shall be computed on the portion of such production, whether it be oil and gas, or either of them, so allocated to the land covered by this lease and included in the unit just as though such production were from such land. The production from an oil well will be considered as production from the lease or oil pooled unit from which it is producing and not as production from a gas pooled unit; and production from a gas well will be considered as production from the lease or gas pooled unit from which it is producing and not from an oil pooled unit. The formation of any unit hereunder shall not have the effect of changing the ownership of any delay rental or shut-in production royalty which may become payable under this lease. If this lease now or hereafter covers separate tracts, no pooling or unitization of royalty interest as between any such separate tracts is intended or shall be implied or result merely from the inclusion of such separate tracts within this lease but Lessee shall nevertheless have the right to pool as provided above with consequent allocation of production as above provided. As used in this paragraph 4, the words "separate tract" mean any tract with royalty ownership differing, now or hereafter, either as to parties or amounts, from that as to any other part of the leased premises.

5. If operations for drilling are not commenced on said land or on acreage pooled therewith as above provided on or before one year from this date, the lease shall then terminate as to both parties, unless on or before such anniversary date Lessee shall pay or tender (or shall make a bona fide attempt to pay or tender, as hereinafter stated) to Lessor or to the credit of Lessor in City National Bank at Bryan, Texas, (which bank and its successors are Lessor's agent and shall continue as the depository for all rentals payable hereunder regardless of changes in ownership of said land or the rentals) the sum of Four Thousand Sixty-six and 19/100-------- Dollars ($4,066.19), (herein called rentals), which shall cover the privilege of deferring commencement of drilling operations for a period of twelve (12) months. In like manner and upon like payments or tenders annually, the commencement of drilling operations may be further deferred for successive periods of twelve (12) months each during the primary term. The payment or tender of rental under this paragraph and of royalty under paragraph 3 on any gas well from which gas is not being sold or used may be made by the check or draft of Lessee mailed or delivered to the parties entitled thereto or to said bank on or before the date of payment. If such bank (or any successor bank) should fail, liquidate or be succeeded by another bank, or for any reason fail or refuse to accept rental, Lessee shall not be held in default for failure to make such payment or tender of rental until thirty (30) days after Lessor shall deliver to Lessee a proper recordable instrument naming another bank as agent to receive such payments or tenders. If Lessee shall, on or before any anniversary date, make a bona fide attempt to pay or deposit rental to a Lessor entitled thereto according to Lessee's records or to a Lessor, who, prior to such attempted payment or deposit, has given Lessee notice, in accordance with subsequent provisions of this lease, of his right to receive rental, and if such payment or deposit shall be ineffective or erroneous in any regard, Lessee shall be unconditionally obligated to pay to such Lessor the rental properly payable for the rental period involved, and this lease shall not terminate but shall be maintained in the same manner as if such erroneous or ineffective rental payment or deposit had been properly made, provided that the erroneous or ineffective rental payment or deposit be corrected within 30 days after receipt by Lessee of written notice from such Lessor of such error accompanied by such instruments as are necessary to enable Lessee to make proper payment. The down cash payment is consideration for this lease according to its terms and shall not be allocated as a mere rental for a period. Lessee may at any time or times execute and deliver to Lessor or to the depository above named or place of record a release or releases of this lease as to all or any part of the above-described premises, or of any mineral or horizon under all or any part thereof, and thereby be relieved of all obligations as to the released land or interest. If this lease is released as to all minerals and horizons under a portion of the land covered by this lease, the rentals and other payments computed in accordance therewith shall thereupon be reduced in the proportion that the number of surface acres within such released portion bears to the total number of surface acres which was covered by this lease immediately prior to such release.

6. If prior to discovery and production of oil, gas or other mineral on said land, or on acreage pooled therewith, or if after discovery and production of oil, gas or other mineral, the production thereof should cease from any cause, this lease shall not terminate if Lessee commences operations for drilling or reworking within sixty (60) days thereafter or if it be within the primary term, commences or resumes the payment or tender of rentals or commences operations for drilling or reworking on or before the rental paying date next ensuing after the expiration of sixty days from date of completion of dry hole or cessation of production. If at any time subsequent to sixty (60) days prior to the beginning of the last year of the primary term and prior to the discovery of oil, gas or other mineral on said land, or on acreage pooled therewith, Lessee should drill a dry hole thereon, no rental payment or operations are necessary in order to keep the lease in force during the remainder of the primary term. If at the expiration of the primary term, oil, gas or other mineral is not being produced on said land, or on acreage pooled therewith, but Lessee is then engaged in drilling or reworking operations thereon or shall have completed a dry hole thereon within sixty (60) days prior to the end of the primary term, the lease shall remain in force so long as operations on said well or for drilling or reworking of any additional well are prosecuted with no cessation of more than sixty (60) consecutive days, and if they result in the production of oil, gas or other mineral, so long thereafter as oil, gas or other mineral is produced from said land or acreage pooled therewith. Any pooled unit designated by Lessee in accordance with the terms hereof may be dissolved by Lessee by instrument filed for record in the appropriate records of the county in which the leased premises are situated at any time after the completion of a dry hole or the cessation of production on said unit. In the event a well or wells producing oil or gas in paying quantities should be brought in on adjacent land and within three hundred thirty (330) feet of and draining the leased premises, or acreage pooled therewith, Lessee agrees to drill such offset wells as a reasonably prudent operator would drill under the same or similar circumstances.

7. Lessee shall have the right at any time during or after the expiration of this lease to remove all property and fixtures placed by Lessee on said land, including the right to draw and remove all casing. When required by Lessor, Lessee will bury all pipe lines below ordinary plow depth, and no well shall be drilled within two hundred (200) feet of any residence or barn now on said land without Lessor's consent.

8. The rights of either party hereunder may be assigned in whole or in part, and the provisions hereof shall extend to their heirs, successors and assigns; but no change or division in ownership of the land, rentals or royalties, however accomplished, shall operate to enlarge the obligations or diminish the rights of Lessee; and no change or division in such ownership shall be binding on Lessee until thirty (30) days after Lessee shall have been furnished by registered U. S. mail at Lessee's principal place of business with a certified copy of recorded instrument or instruments evidencing same. In the event of assignment hereof in whole or in part, liability for breach of any obligation hereunder shall rest exclusively upon the owner of this lease or of a portion thereof who commits such breach. In the event of the death of any person entitled to rentals hereunder, Lessee may pay or tender such rentals to the credit of the deceased or the estate of the deceased until such time as Lessee is furnished with proper evidence of the appointment and qualification of an executor or administrator of the estate, or if there be none, then until Lessee is furnished with evidence satisfactory to it as to the heirs or devisees of the deceased and that all debts of the estate have been paid. If at any time two or more persons be entitled to participate in the rental payable hereunder; Lessee may pay or tender said rental jointly to such persons or to their joint credit in the depository named herein; or, at Lessee's election, the proportionate part of said rentals to which each participant is entitled may be paid or tendered to him separately or to his separate credit in said depository; and payment or tender to any participant of his portion of the rentals hereunder shall maintain this lease as to such participant. In event of assignment of this lease as to a segregated portion of said land, the rentals payable hereunder shall be apportionable as between the several leasehold owners ratably according to the surface area of each, and default in rental payment by one shall not affect the rights of other leasehold owners hereunder. If six or more parties become entitled to royalty hereunder, Lessee may withhold payment thereof unless and until furnished with a recordable instrument executed by all such parties designating an agent to receive payment for all.

9. The breach by Lessee of any obligation arising hereunder shall not work a forfeiture or termination of this lease nor cause a termination or reversion of the estate created hereby nor be grounds for cancellation hereof in whole or in part. In the event Lessor considers that operations are not at any time being conducted in compliance with this lease, Lessor shall notify Lessee in writing of the facts relied upon as constituting a breach hereof, and Lessee, if in default, shall have sixty days after receipt of such notice in which to commence the compliance with the obligations imposed by virtue of this instrument. After the discovery of oil, gas or other mineral in paying quantities on said premises, Lessee shall develop the acreage retained hereunder as a reasonably prudent operator, but in discharging this obligation it shall in no event be required to drill more than one well per forty (40) acres of the area retained hereunder and capable of producing oil in paying quantities and one well per 640 acres plus an acreage tolerance not to exceed 10% of 640 acres of the area retained hereunder and capable of producing gas or other mineral in paying quantities.

10. Lessor hereby warrants and agrees to defend the title to said land and agrees that Lessee at its option may discharge any tax, mortgage or other lien upon said land, either in whole or in part, and in event Lessee does so, it shall be subrogated to such lien with right to enforce same and apply rentals and royalties accruing hereunder toward satisfying same. Without impairment of Lessee's rights under the warranty in event of failure of title, it is agreed that if this lease covers a less interest in the oil, gas, sulphur, or other minerals in all or any part of said land than the entire and undivided fee simple estate (whether Lessor's interest is herein specified or not), or no interest therein, then the royalties, delay rental, and other monies accruing from any part as to which this lease covers less than such full interest, shall be paid only in the proportion which the interest therein, if any, covered by this lease, bears to the whole and undivided fee simple estate therein. All royalty interest covered by this lease (whether or not owned by Lessor) shall be paid out of the royalty herein provided. Should any one or more of the parties named above as Lessors fail to execute this lease, it shall nevertheless be binding upon the party or parties executing the same. Failure of Lessee to reduce rental paid hereunder shall not impair the right of Lessee to reduce royalties.

11. Should Lessee be prevented from complying with any express or implied covenant of this lease, from conducting drilling or reworking operations thereon or from producing oil or gas therefrom by reason of scarcity of or inability to obtain or to use equipment or material, or by operation of force majeure, any Federal or state law or any order, rule or regulation of governmental authority, then while so prevented, Lessee's obligation to comply with such covenant shall be suspended, and Lessee shall not be liable in damages for failure to comply therewith; and this lease shall be extended while and so long as Lessee is prevented by any such cause from conducting drilling or reworking operations on or from producing oil or gas from the leased premises; and the time while Lessee is so prevented shall not be counted against Lessee, anything in this lease to the contrary notwithstanding.

12. (See EXHIBIT "A" attached)

IN WITNESS WHEREOF, this instrument is executed on the date first above written.

John B Dougherty

Lucille Dougherty

STATE OF TEXAS

COUNTY OF BRAZOS

INDIVIDUAL ACKNOWLEDGMENT

Before me, the undersigned authority, on this day personally appeared John B. Dougherty and Lucille Dougherty

known to me to be the person whose name is (are) subscribed to the foregoing instrument, and acknowledged to me that executed the same as free act and deed for the purposes and consideration therein expressed.

Given under my hand and seal of office this 22nd day of February, 1978.

Gloria J. Weichert

Notary Public in and for Brazos County, State of Texas

STATE OF

COUNTY OF

HUSBAND AND WIFE ACKNOWLEDGMENT

Before me, the undersigned authority, on this day personally appeared

and husband and wife, known to me to be the persons whose names are subscribed to the foregoing instrument, and acknowledged to me that they executed the same as their free act and deed for the purposes and consideration therein expressed.

Given under my hand and seal of office this day of , 19 .

Notary Public in and for County, State of

Producers 88 (7-66)
With 640 Acres Pooling Provision

No.

Oil, Gas and Mineral Lease

FROM

TO

Dated , 19

No. Acres

County, Texas

Term

This instrument was filed for record on the

day of , 19 , at

o'clock M., and duly recorded in

Book Page

of the records of this office.

County Clerk

By Deputy

When recorded return to

THE STATE OF TEXAS)
COUNTY OF BRAZOS)
I, Mary Ann Ward, County Clerk of Brazos County, Texas do hereby certify that the foregoing is a true and correct copy of the original as the same appears of record in Vol. 30 Page 428 in O.P.R. Records of said County on file in my office.
ATTEST 8-9-93
Mary Ann Ward, County Clerk
Brazos County, Texas
By Teresa Palomar Deputy

Producers 88 (7-66)
With 640 Acres Pooling Provision

VOL. 30 PAGE 432

Houston Blueprint & Stationery Co.

140304

OIL, GAS AND MINERAL LEASE

FILED FOR RECORD
DATE 3-3-78
AT 10 O'CLOCK A M
FRANK BORISKIE
BRAZOS COUNTY CLERK
BY [illegible]

THIS AGREEMENT made this 15th day of February 19 78, between John M. Lawrence III, Trustee

Date Recorded 3-[illegible]-78

Lessor (whether one or more), whose address is: 308 East 25th St., Bryan, Texas 77801
and William C. Richardson, 3131 Briarpark, Houston, Texas, Lessee, WITNESSETH:

1. Lessor in consideration of Ten and no/100 Dollars ($ 10.00), in hand paid, of the royalties herein provided, and of the agreements of Lessee herein contained, hereby grants, leases and lets exclusively unto Lessee for the purpose of investigating, exploring, prospecting, drilling and mining for and producing oil, gas and all other minerals, conducting exploration, geologic and geophysical surveys by seismograph, core test, gravity and magnetic methods, injecting gas, water and other fluids, and air into subsurface strata, laying pipe lines, building roads, tanks, power stations, telephone lines and other structures thereon and on, over and across lands owned or claimed by Lessor adjacent and contiguous thereto, to produce, save, take care of, treat, transport and own said products, and housing its employees, the following described land in Brazos County, Texas, to-wit:

First Tract: 371 acres, more or less, out of the S.W. Robertson Survey A-202, being the same land described in that certain Mineral Deed from D. Mike to Mills P. Walker dated April 8, 1932, recorded in Volume 81 at page 528 of the Deed Recordes of Brazos County, Texas.

Second Tract: 1168 acres, more or less, out of the Andrew Houston Survey A-133 and J. Barrera Survey A-68, being the same land described in that certain Mineral Deed from M.P. Walker to D. Mike dated January 14, 1932 recorded in Volume 81 at page 242 of the Deed Records of Brazos County, Texas, which deed described 1185 acres and excepted 17 acres, more or less.

Third Tract: 270 acres, more or less, out of the James Gray Survey, A-250, as more particularly described in deed dated July 30, 1920 from J.T. Swanson to D. Mike, recorded in Volume 54 at page 289 of the deed records of Brazos County, Texas.

John M. Lawrence III

This lease also covers and includes all land owned or claimed by Lessor adjacent or contiguous to the land particularly described above, whether the same be in said survey or surveys or in adjacent surveys, although not included within the boundaries of the land particularly described above. For the purpose of calculating the rental payments hereinafter provided for, said land is estimated to comprise 1809 acres, whether it actually comprises more or less.

2. Subject to the other provisions herein contained, this lease shall be for a term of five years from this date (called "primary term") and as long thereafter as oil, gas or other mineral is produced from said land or land with which said land is pooled hereunder.

3. The royalties to be paid by Lessee are: (a) on oil, one-eighth of that produced and saved from said land, the same to be delivered at the wells or to the credit of Lessor into the pipelines to which the wells may be connected; Lessee may from time to time purchase any royalty oil in its possession, paying the market price therefor prevailing for the field where produced on the date of purchase; (b) on gas, including casinghead gas or other gaseous substance, produced from said land and sold or used off the premises or for the extraction of gasoline or other product therefrom, the market value at the well of one-eighth of the gas so sold or used, provided that on gas sold at the wells the royalty shall be one-eighth of the amount realized from such sale; while there is a gas well on this lease or on acreage pooled therewith but gas is not being sold or used, Lessee may pay as royalty, on or before ninety (90) days after the date on which (1) said well is shut in, or (2) the land covered hereby or any portion thereof is included in a pooled unit on which a well is located, or (3) this lease ceases to be otherwise maintained as provided herein, whichever is the later date, and thereafter at annual intervals on or before the anniversary of the date the first payment is made, a sum equal to the amount of the annual rental payable in lieu of drilling operations during the primary term on the number of acres subject to this lease at the time such payment is made, and if such payment is made or tendered, this lease shall not terminate, and it will be considered that gas is being produced from this lease in paying quantities; and (c) on all other minerals mined and marketed, one-tenth either in kind or value at the well or mine, at Lessee's election, except that on sulphur mined and marketed the royalty shall be fifty cents (50¢) per long ton. Lessee shall have free use of oil, gas, coal, and water from said land, except water from Lessor's wells, for all operations hereunder, and the royalty on oil, gas and coal shall be computed after deducting any so used.

3/16

4. Lessee, at its option, is hereby given the right and power to pool or combine the acreage covered by this lease or any portion thereof as to oil and gas, or either of them, with any other land covered by this lease, and/or with any other land, lease or leases in the immediate vicinity thereof to the extent hereinafter stipulated, when in Lessee's judgment it is necessary or advisable to do so in order properly to explore, or to develop and operate said leased premises in compliance with the spacing rules of the Railroad Commission of Texas, or other lawful authority, or when to do so would, in the judgment of Lessee, promote the conservation of oil and gas in and under and that may be produced from said premises. Units pooled for oil hereunder shall not substantially exceed 40 acres each in area, and units pooled for gas hereunder shall not substantially exceed in area 640 acres each plus a tolerance of ten percent (10%) thereof, provided that should governmental authority having jurisdiction prescribe or permit the creation of units larger than those specified, for the drilling or operation of a well at a regular location or for obtaining maximum allowable from any well to be drilled, drilling or already drilled, units thereafter created may conform substantially in size with those prescribed or permitted by governmental regulations. Lessee under the provisions hereof may pool or combine acreage covered by this lease or any portion thereof as above provided as to oil in any one or more strata and as to gas in any one or more strata. The units formed by pooling as to any stratum or strata need not conform in size or area with the unit or units into which the lease is pooled or combined as to any other stratum or strata, and oil units need not conform as to area with gas units. The pooling in one or more instances shall not exhaust the rights of the Lessee hereunder to pool this lease or portions thereof into other units. Lessee shall file for record in the appropriate records of the county in which the leased premises are situated an instrument describing and designating the pooled acreage as a pooled unit; and upon such recordation the unit shall be effective as to all parties hereto, their heirs, successors, and assigns, irrespective of whether or not the unit is likewise effective as to all other owners of surface, mineral, royalty, or other rights in land included in such unit. Lessee may at its election exercise its pooling option before or after commencing operations for or completing an oil or gas well on the leased premises, and the pooled unit may include, but it is not required to include, land or leases upon which a well capable of producing oil or gas in paying quantities has theretofore been completed or upon which operations for the drilling of a well for oil or gas have theretofore been commenced. In the event of operations for drilling on or production of oil or gas from any part of a pooled unit which includes all or a portion of the land covered by this lease, regardless of whether such operations for drilling were commenced or such production was secured before or after the execution of this instrument or the instrument designating the pooled unit, such operations shall be considered as operations for drilling on or production of oil or gas from land covered by this lease whether or not the well or wells be located on the premises covered by this lease and in such event operations for drilling shall be deemed to have been commenced on said land within the meaning of paragraph 5 of this lease; and the entire acreage constituting such unit or units, as to oil and gas, or either of them, herein provided, shall be treated for all purposes, except the payment of royalties on production from the pooled unit, as if the same were included in this lease. For the purpose of computing the royalties to which owners of royalties and payments out of production and each of them shall be entitled on production of oil and gas, or either of them, from the pooled unit, there shall be allocated to the land covered by this lease and included in said unit (or to each separate tract within the unit if this lease covers separate tracts within the unit) a pro rata portion of the oil and gas, or either of them, produced from the pooled unit after deducting that used for operations on the pooled unit. Such allocation shall be on an acreage basis—that is to say, there shall be allocated to the acreage covered by this lease and included in the pooled unit (or to each separate tract within the unit if this lease covers separate tracts within the unit) that pro rata portion of the oil and gas, or either of them, produced from the pooled unit which the number of surface acres covered by this lease (or in each such separate tract) and included in the pooled unit bears to the total number of surface acres included in the pooled unit. Royalties hereunder shall be computed on the portion of such production, whether of oil and gas, or either of them, so allocated to the land covered by this lease and included in the unit just as though such production were from such land. The production from an oil well will be considered as production from the lease or oil pooled unit from which it is producing and not as production from a gas pooled unit; and production from a gas well will be considered as production from the lease or gas pooled unit from which it is producing and not from an oil pooled unit. The formation of any unit hereunder shall not have the effect of changing the ownership of any delay rental or shut-in production royalty which may become payable under this lease. If this lease now or hereafter covers separate tracts, no pooling or unitization of royalty interest as between any such separate tracts is intended or shall be implied or result merely from the inclusion of such separate tracts within this lease but Lessee shall nevertheless have the right to pool as provided above with consequent allocation of production as above provided. As used in this paragraph 4, the words "separate tract" mean any tract with royalty ownership differing, now or hereafter, either as to parties or amounts, from that as to any other part of the leased premises.

5. If operations for drilling are not commenced on said land or on acreage pooled therewith as above provided on or before one year from this date, the lease shall then terminate as to both parties, unless on or before such anniversary date Lessee shall pay or tender (or shall make a bona fide attempt to pay or tender, as hereinafter stated) to Lessor or to the credit of Lessor in First Bank and Trust Bank at Bryan, Texas, (which bank and its successors are Lessor's agent and shall continue as the depository for all rentals payable hereunder regardless of changes in ownership of said land or the rentals) the sum of Seven Hundred Ten and 06/100 Dollars ($ 710.06), (herein called rentals), which shall cover the privilege of deferring commencement of drilling operations for a period of twelve (12) months. In like manner and upon like payments or tenders annually, the commencement of drilling operations may be further deferred for successive periods of twelve (12) months each during the primary term. The payment or tender of rental under this paragraph and of royalty under paragraph 3 on any gas well from which gas is not being sold or used may be made by the check or draft of Lessee mailed or delivered to the parties entitled thereto or to said bank on or before the date of payment. If such bank (or any successor bank) should fail, liquidate or be succeeded by another bank, or for any reason fail or refuse to accept rental, Lessee shall not be held in default for failure to make such payment or tender of rental until thirty (30) days after Lessor shall deliver to Lessee a proper recordable instrument naming another bank as agent to receive such payments or tenders. If Lessee shall, on or before any anniversary date, make a bona fide attempt to pay or deposit rental to a Lessor entitled thereto according to Lessee's records or to a Lessor, who, prior to such attempted payment or deposit, has given Lessee notice, in accordance with subsequent provisions of this lease, of his right to receive rental, and if such payment or deposit shall be ineffective or erroneous in any regard, Lessee shall be unconditionally obligated to pay to such Lessor the rental properly payable for the rental period involved, and this lease shall not terminate but shall be maintained in the same manner as if such erroneous or ineffective rental payment or deposit had been properly made, provided that the erroneous or ineffective rental payment or deposit be corrected within 30 days after receipt by Lessee of written notice from such Lessor of such error accompanied by such instruments as are necessary to enable Lessee to make proper payment. The down cash payment is consideration for this lease according to its terms and shall not be allocated as a mere rental for a period. Lessee may at any time or times execute and deliver to Lessor or to the depository above named or place of record a release or releases of this lease as to all or any part of the above-described premises, or of any mineral or horizon under all or any part thereof, and thereby be relieved of all obligations as to the released land or interest. If this lease is released as to all minerals and horizons under a portion of the land covered by this lease, the rentals and other payments computed in accordance therewith shall thereupon be reduced in the proportion that the number of surface acres within such released portion bears to the total number of surface acres which was covered by this lease immediately prior to such release.

6. If prior to discovery and production of oil, gas or other mineral on said land or on acreage pooled therewith, Lessee should drill a dry hole or holes thereon, or if after discovery and production of oil, gas or other mineral, the production thereof should cease from any cause, this lease shall not terminate if Lessee commences operations for drilling or reworking within sixty (60) days thereafter or if it be within the primary term, commences or resumes the payment or tender of rentals or commences operations for drilling or reworking on or before the rental paying date next ensuing after the expiration of sixty days from date of completion of dry hole or cessation of production. If at any time subsequent to sixty (60) days prior to the beginning of the last year of the primary term and prior to the discovery of oil, gas or other mineral on said land, or on acreage pooled therewith, Lessee should drill a dry hole thereon, no rental payment or operations are necessary in order to keep the lease in force during the remainder of the primary term. If at the expiration of the primary term, oil, gas or other mineral is not being produced on said land, or on acreage pooled therewith, but Lessee is then engaged in drilling or reworking operations thereon or shall have completed a dry hole thereon within sixty (60) days prior to the end of the primary term, the lease shall remain in force so long as operations on said well or for drilling or reworking of any additional well are prosecuted with no cessation of more than sixty (60) consecutive days, and if they result in the production of oil, gas or other mineral, so long thereafter as oil, gas or other mineral is produced from said land or acreage pooled therewith. Any pooled unit designated by Lessee in accordance with the terms hereof may be dissolved by Lessee by instrument filed for record in the appropriate records of the county in which the leased premises are situated at any time after the completion of a dry hole or the cessation of production on said unit. In the event a well or wells producing oil or gas in paying quantities should be brought in on adjacent land and within three hundred thirty (330) feet of and draining the leased premises, or acreage pooled therewith, Lessee agrees to drill such offset wells as a reasonably prudent operator would drill under the same or similar circumstances.

7. Lessee shall have the right at any time during or after the expiration of this lease to remove all property and fixtures placed by Lessee on said land, including the right to draw and remove all casing. When required by Lessor, Lessee will bury all pipe lines below ordinary plow depth, and no well shall be drilled within two hundred (200) feet of any residence or barn now on said land without Lessor's consent.

8. The rights of either party hereunder may be assigned in whole or in part, and the provisions hereof shall extend to their heirs, successors and assigns; but no change or division in ownership of the land, rentals or royalties, however accomplished, shall operate to enlarge the obligations or diminish the rights of Lessee; and no change or division in such ownership shall be binding on Lessee until thirty (30) days after Lessee shall have been furnished by registered U. S. mail at Lessee's principal place of business with a certified copy of recorded instrument or instruments evidencing same. In the event of assignment hereof in whole or in part, liability for breach of any obligation hereunder shall rest exclusively upon the owner of this lease or of a portion thereof who commits such breach. In the event of the death of any person entitled to rentals hereunder, Lessee may pay or tender such rentals to the credit of the deceased or the estate of the deceased until such time as Lessee is furnished with proper evidence of the appointment and qualification of an executor or administrator of the estate, or if there be none, then until Lessee is furnished with evidence satisfactory to it as to the heirs or devisees of the deceased and that all debts of the estate have been paid. If at any time two or more persons be entitled to participate in the rental payable hereunder, Lessee may pay or tender said rental jointly to such persons or to their joint credit in the depository named herein; or, at Lessee's election, the proportionate part of said rentals to which each participant is entitled may be paid or tendered to him separately or to his separate credit in said depository; and payment or tender to any participant of his portion of the rentals hereunder shall maintain this lease as to such participant. In event of assignment of this lease as to a segregated portion of said land, the rentals payable hereunder shall be apportionable as between the several leasehold owners ratably according to the surface area of each, and default in rental payment by one shall not affect the rights of other leasehold owners hereunder. If six or more parties become entitled to royalty hereunder, Lessee may withhold payment thereof unless and until furnished with a recordable instrument executed by all such parties designating an agent to receive payment for all.

9. The breach by Lessee of any obligation arising hereunder shall not work a forfeiture or termination of this lease nor cause a termination or reversion of the estate created hereby nor be grounds for cancellation hereof in whole or in part. In the event Lessor considers that operations are not at any time being conducted in compliance with this lease, Lessor shall notify Lessee in writing of the facts relied upon as constituting a breach hereof, and Lessee, if in default, shall have sixty days after receipt of such notice in which to commence the compliance with the obligations imposed by virtue of this instrument. After the discovery of oil, gas or other mineral in paying quantities on said premises, Lessee shall develop the acreage retained hereunder as a reasonably prudent operator, but in discharging this obligation it shall in no event be required to drill more than one well per forty (40) acres of the area retained hereunder and capable of producing oil in paying quantities and one well per 640 acres plus an acreage tolerance not to exceed 10% of 640 acres of the area retained hereunder and capable of producing gas or other mineral in paying quantities.

10. Lessor hereby warrants and agrees to defend the title to said land and agrees that Lessee at its option may discharge any tax, mortgage or other lien upon said land, either in whole or in part, and in event Lessee does so, it shall be subrogated to such lien with right to enforce same and apply rentals and royalties accruing hereunder toward satisfying same. Without impairment of Lessee's rights under the warranty in event of failure of title, it is agreed that if this lease covers a less interest in the oil, gas, sulphur, or other minerals in all or any part of said land than the entire and undivided fee simple estate (whether Lessor's interest is herein specified or not), or no interest therein, then the royalties, delay rental, and other monies accruing from any part as to which this lease covers less than such full interest, shall be paid only in the proportion which the interest therein, if any, covered by this lease, bears to the whole and undivided fee simple estate therein. All royalty interest covered by this lease (whether or not owned by Lessor) shall be paid out of the royalty herein provided. Should any one or more of the parties named above as Lessors fail to execute this lease, it shall nevertheless be binding upon the party or parties executing the same. Failure of Lessee to reduce rental paid hereunder shall not impair the right of Lessee to reduce royalties.

11. Should Lessee be prevented from complying with any express or implied covenant of this lease, from conducting drilling or reworking operations thereon or from producing oil or gas therefrom by reason of scarcity of or inability to obtain or to use equipment or material, or by operation of force majeure, any Federal or state law or any order, rule or regulation of governmental authority, then while so prevented, Lessee's obligation to comply with such covenant shall be suspended, and Lessee shall not be liable in damages for failure to comply therewith; and this lease shall be extended while and so long as Lessee is prevented by any such cause from conducting drilling or reworking operations on or from producing oil or gas from the leased premises; and the time while Lessee is so prevented shall not be counted against Lessee, anything in this lease to the contrary notwithstanding.

See EXHIBIT "A" Attached

IN WITNESS WHEREOF, this instrument is executed on the date first above written.

John M Lawrence III
Trustee

STATE OF TEXAS
COUNTY OF BRAZOS

INDIVIDUAL ACKNOWLEDGMENT

Before me, the undersigned authority, on this day personally appeared John M. Lawrence III, Trustee known to me to be the person whose name is (are) subscribed to the foregoing instrument, and acknowledged to me that he executed the same for the purposes and consideration therein expressed, and in the capacity therein stated.

Given under my hand and seal of office this 22nd day of February, 1978.

Gloria J. Weichert
Notary Public in and for Brazos County, State of Texas

STATE OF
COUNTY OF

HUSBAND AND WIFE ACKNOWLEDGMENT

Before me, the undersigned authority, on this day personally appeared

and husband and wife, known to me to be the persons whose names are subscribed to the foregoing instrument, and acknowledged to me that they executed the same as their free act and deed for the purposes and consideration therein expressed.

Given under my hand and seal of office this day of , 19 .

Notary Public in and for County, State of

Houston Blueprint & Stationery Co.

When recorded return to

By Deputy

County Clerk

of the records of this office.

Book Page

day of , 19 , at o'clock M., and duly recorded in

This instrument was filed for record on the

Term County, Texas

No. Acres

Dated 19

TO

FROM

Oil, Gas and Mineral Lease

No.

Producers 88 (T-64)
With 640 Acres Pooling Provision

10

M-95380
Adjacent
Parks

THE STATE OF TEXAS)
COUNTY OF BRAZOS)
I, Mary Ann Ward, County Clerk of Brazos County, Texas do hereby certify that the foregoing is a true and correct copy of the original as the same appears of record in Vol. 30 Page 432 in O.R.G. Records of said County on file in my office.
ATTEST 8-9-93
Mary Ann Ward, County Clerk
Brazos County, Texas
By Teresa Palomares, Deputy

Seneca Resources Corporation
a National Fuel Gas System company

February 4, 1994

General Land Office
State of Texas
Stephen F. Austin Building
1700 N. Congress Avenue
Austin, Texas 78701

Re: State Lease No. M-95380
Highway Right-of-Way Tract
N. E. Millican Prospect
Brazos County, Texas

Gentlemen:

Enclosed for filing in the appropriate records of the General Land Office, please find a certified copy of the captioned lease which has been duly filed of record in Brazos County, Texas.

Sincerely,

SENECA RESOURCES CORPORATION

Gwen A. Cook

Gwen A. Cook
Lease Analyst

/gc

Enclosure

RECEIVED
FEB - 8 1994
ENERGY RESOURCES

g1142

333 CLAY STREET/SUITE 4150/HOUSTON, TEXAS 77002/(713) 658-0191

Land Department Fax Number: (713) 654-2659

7 rom M95380

FAX COVER SHEET

TO: Lillie Gamble 512 - 475-1543	
FROM: Jeanette Rossi	DEPARTMENT: Land
DATE: 5-8-95	NUMBER OF PAGES (Including this page) 4
RE: Barnes #2 - St TX acreage	
MESSAGE: Per our discussion regarding re-survey of State 3.00 to 1.90 ac.	
Sheila M95380	

If you do not receive this document in its entirety, please contact the following individual as soon as possible:

RECEIVED MAY - 8 1995

Joy Trapolino
Name

Phone: (713) 654-2646

****

CONFIDENTIALITY NOTE

THE INFORMATION ACCOMPANYING THIS FACSIMILE TRANSMISSION CONTAINS INFORMATION FROM SENECA RESOURCES CORPORATION, WHICH IS CONFIDENTIAL AND/OR PRIVILEGED. THE INFORMATION IS INTENDED TO BE FOR THE USE OF THE INDIVIDUAL OR ENTITY NAMED ON THIS TRANSMISSION SHEET. IF YOU ARE NOT THE INTENDED RECIPIENT, BE AWARE THAT ANY DISCLOSURE, COPYING, DISTRIBUTION OR USE OF THE CONTENTS OF THIS FACSIMILE INFORMATION IS PROHIBITED. IF YOU HAVE RECEIVED THIS FACSIMILE IN ERROR, PLEASE IMMEDIATELY NOTIFY THE SENDER BY TELEPHONE SO THAT WE CAN ARRANGE FOR THE RETRIEVAL OF THE ORIGINAL DOCUMENTS AT NO COST TO YOU.
****

I:\JMT\TESC-FAX

1. JR
2. DOTO File
Barrera #2

ROBERT E. JACK, ATTORNEY AT LAW

FAX TRANSMITTAL FORM

DATE: February 15, 1994

TO: Mr. Robert C. Williams, Land Manager, Seneca Resources Corp.

FAX NUMBER: 713/655-2240

FROM: **Robert E. Jack, Attorney at Law**
P. O. Box 1257
Cameron, Texas 76520
Telephone Number: (Voice) 817/697-4130
Telephone Number: (Fax) 817/697-2626

NUMBER OF PAGES, INCLUDING THIS TRANSMITTAL SHEET: 3 PAGE(S) SENT

IF YOU ARE NOT RECEIVING CLEARLY, OR IF YOU HAVE ANY PROBLEM WITH THIS TRANSMISSION, PLEASE CALL US BACK IMMEDIATELY AT 817/697-4130.

COMMENTS:
Dear Mr. Williams:

As requested by you during the course of our telephone conversation on February 14, 1994, following this cover sheet you will find a copy of the revised plat of the Barrera No. 2 Unit. The most important changes were the removal of part of Tract 8 from the Unit, and a correction of the size of the State Right-of-Way where it crosses the easternmost boundary of Tract 19.

Also, following this cover sheet you will find a copy of a separate plat prepared for me by the surveyor which shows the actual amount of acreage in the original State Right-of-Way between Tracts 11 and 12. (Due to the number of mineral boundaries which do not coincide with each other, and the small physical size of the paper used for recording the Unit Plat, the Surveyor had to omit many boundary lines for the sake of clarity.) Please recall that the acreage in the State ROW which you have under lease is the original 100' ROW conveyed to the State in the early 1930's and is NOT the ROW as presently evidenced on the ground.

Additionally, and as discussed with you, I have been asked to prepare (and should have out this week) a revised Unit Declaration. However, as indicated in Exhibit "C" to the opinion letter, there are many individuals and entities who appear (from the public record) to have the right to control whether or not their undivided interest are pooled into the unit. Conversely, you indicated to me that you had unrecorded documents which, in many instances, placed such right in Seneca's name. Obviously I cannot comment on such documents as they have not been available to me, nor have I been asked to review same. However, I am sure Dale will be interested in such documentation as it would allow that company to make the necessary legal and business decisions as to whether or not the failure to join all the record title owners of interests in the minerals in the execution of the unit designation could lead, at a later date, to litigation and claims for damages.

Very truly yours,

Robert E. Jack

REJ/pb

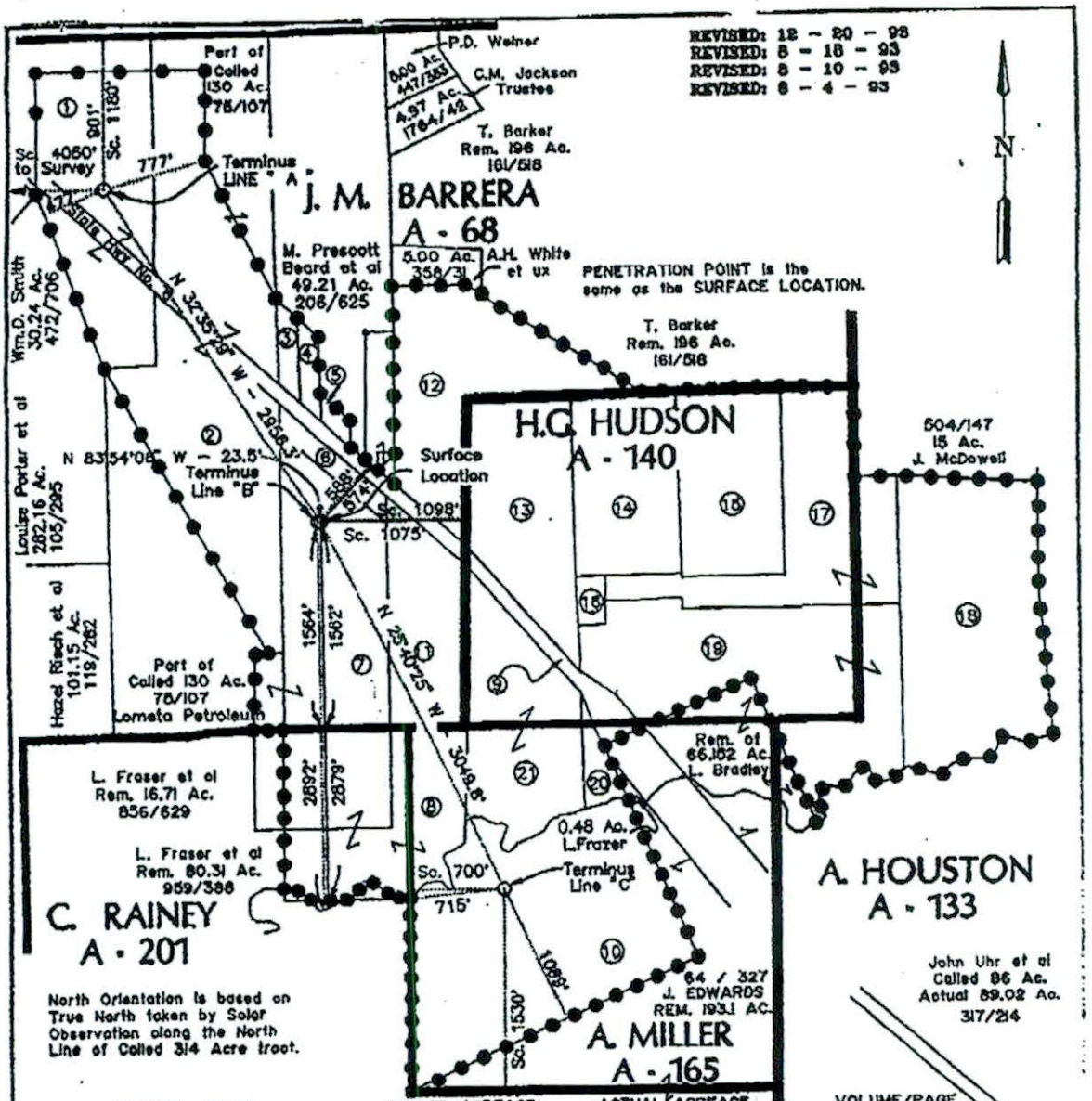

	MINERAL OWNER	CALLED ACREAGE	ACTUAL ACREAGE	VOLUME/PAGE
1	Louise Porter, et al	Part of 314.0 out of 344.0	34.26	105/295
2	Dole Resources	Part of 130.0	63.21	75/107
3	1st American Bank	3.00	2.15	1163/701
4	N.M. Greer et ux	3.00	2.14	304/159
5	Frank Thurmon, Jr. et al	1.037	0.97	1057/348 & 994/360
6	W. D. Fitch	2.741	2.63	1010/519
7	Emilio Ayche et al	Part of 60.0	37.64	1163/647
8	Lawrence Fraser et al	Part of 16.71 & Part of 80.31	57.19	856/629 & 959/388
9	STATE OF TEXAS et al	Part of 47.36 & Res.17.0	16.62	1773/15 & 81/242
10	Jane Edwards	Part of 193.1	66.70	64/327
11	J.B. Daugherty et al	17.0	21.94	151/397 Ref.30/428
12	Est. of Mills P. Walker & D.Mike	5.64 & Part of 196.0	33.62	161/518 Ref.29/525 & 30/432
13	Robert Becker et al	28.10	28.64	292/552
14	Robert Becker et al	25.0	24.88	193/423
15	Robert Becker et al	25.0	24.97	740/765
16	Gus Bradley, Jr. et al	1.81	1.82	452/897
17	Lawrence Bradley et al	33.076	33.076	1329/191
18	Tom Barker et al	55.0	49.88	161/518
19	J.D. Langley et ux	Part of 66.152	51.874	1329/191 Ref.1461/276
20	Lawrence Fraser et al	Part of 3.0	3.07	284/853
21	J. W. Sims et al	20.4	25.49	226/107

TOTAL 561.97 ACRES

I, H. CURTIS STRONG, REGISTERED PROFESSIONAL LAND SURVEYOR NO. 4961, DO HEREBY CERTIFY THAT THE WELL LOCATION AS SHOWN WAS STAKED ON THE GROUND AND IS TRUE AND CORRECT TO THE BEST OF MY KNOWLEDGE.

H. Curtis Strong

H. CURTIS STRONG

STATE OF TEXAS
HORACE CURTIS STRONG
4961
PROFESSIONAL
LAND SURVEYOR

DALE OPERATING COMPANY

BARRERA NO. 2

H.C. HUDSON, J.M. BARRERA, A. MILLER, C. RAINEY, & A. HOUSTON SURVEYS
BRAZOS COUNTY, TEXAS

Scale: 1" = 1000'
May 11, 1993

PREPARED BY: Garrett Engineering
Bryan, Tx. 77802 Ph. (409) 846 - 2688

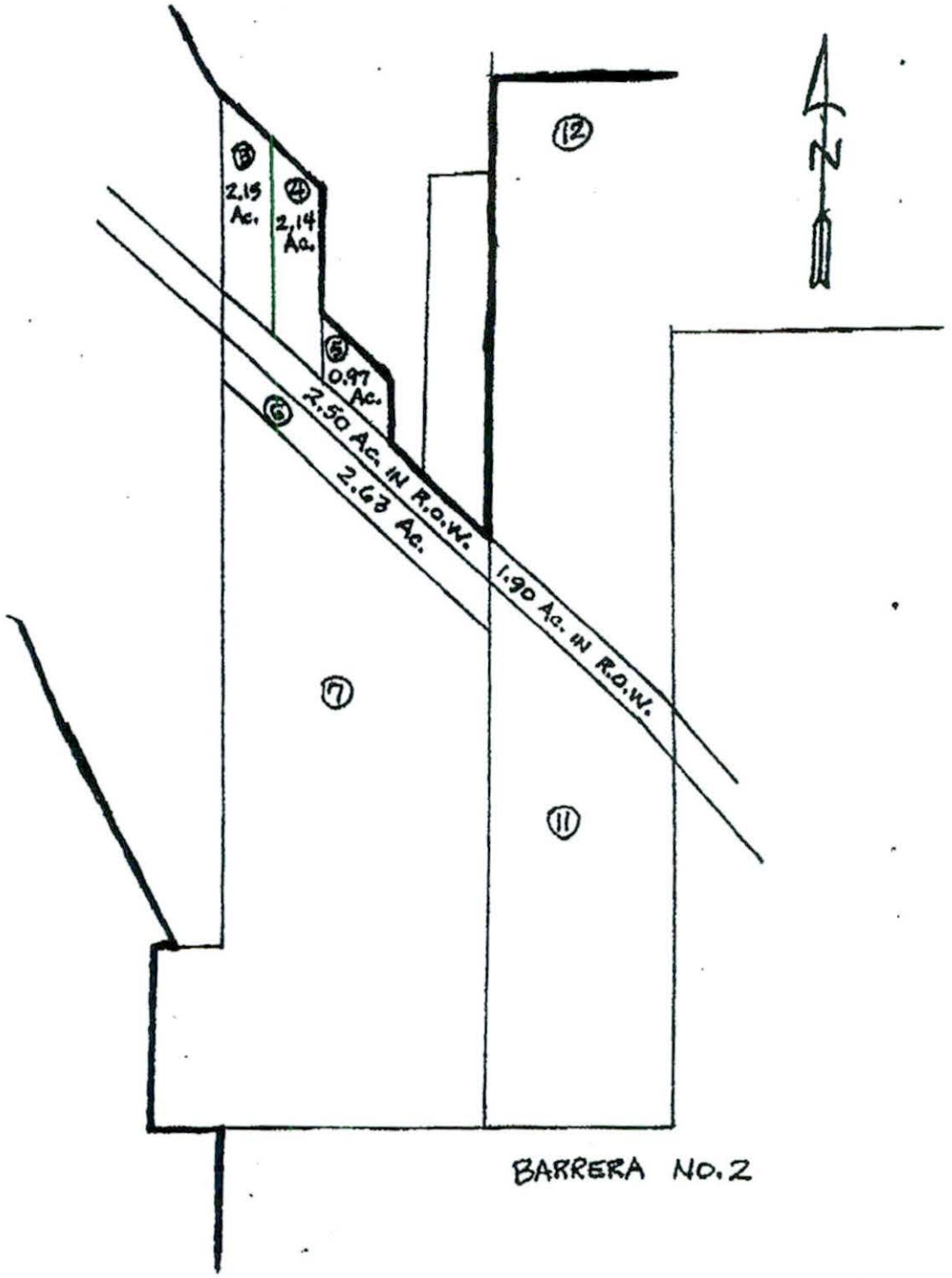
N
12
3
2.15 Ac.
4
2.14 Ac.
5
0.97 Ac.
6
2.50 Ac. IN R.O.W.
2.63 Ac.
1.90 Ac. IN R.O.W.
7
11

BARRERA NO. 2

5-8-95

(12) Fax copies from Seneca
(Resurvey acres / PLAT)

M95380

Seneca Resources Corporation

a National Fuel Gas System company

Unit # 2349

M95228

August 8, 1994 M95380 ✓

lg

General Land Office
1700 North Congress Street
Room 600
Austin, Texas 78701
Attention: Ms. Robin Olson

Re: Barrera No. 2 Well
N.E. Millican Prospect
Brazos County, Texas

Dear Ms. Olson:

Pursuant to our conversation regarding the tract participation of the State of Texas lease No. M-95380 located in the referenced unit, please be advised that based on a re-survey of the Barrera No. 2 unit, the State of Texas lease is now shown to cover 1.9 acres and the unit now contains 561.97 acres. The calculations that you discussed with Marion Smith of our office may be associated with the State Lease owned by Dale Operating on another portion of this right-of -way in which Seneca is not involved.

For your review, enclosed please find the following documentation describing Seneca's State Lease and its tract participation in the referenced well:.

1. State of Texas Lease No. M-95380 dated November 2, 1993 - Originally showed 3.00 acres, re-surveyed to 1.90 acres with a 3/16ths royalty.

2. A portion of the field notes describing the entire State of Texas gross leased acreage in the unit (This would include Dale and Seneca leases)

3. A copy of the final re-survey of the Barrera No. 2 Unit containing 561.97 acres, including a larger scale plat of the 1.90 acre lease in the unit.

4. A copy of a portion of the Original Division Order Title Opinion by Robert E. Jack dated February 4, 1994 showing the calculations for the tracts located in the entire unit, including the 1.90 acre tract.

RECEIVED
AUG 10 1994
ENERGY RESOURCES

J2468

333 CLAY STREET/SUITE 4150/HOUSTON, TEXAS 77002/(713) 658-0191

5. A copy of a portion of the First Supplemental Division Order Title Opinion by Jackson & Walker dated April 5, 1994 covering 57.46 acres and confirming the royalty calculations for the Seneca lease.

Consequently, the tract participation factor would be 1.90/561.97 = .0033809. .0033809 X 3/16 royalty = .0006339 interest as shown on our division order for the referenced well.

If you wish to discuss this matter further or require any additional information, please do not hesitate to call me at 713-658-0191.

Sincerely,

SENECA RESOURCES CORPORATION

Jeanette Rossi

Jeanette Rossi
Division Order Analyst

713 654-2644

Enclosures

J2468

.OW Lease
.evised 10/89

The State of Texas

543725

Austin, Texas

FILED
94 JAN 25 PM 1:57
BRAZOS COUNTY COURTHOUSE
BY CO. CLERK
DEPUTY

PAID-UP

OIL AND GAS LEASE NO. M-95380
GENERAL LAND OFFICE
AUSTIN, TEXAS

THIS AGREEMENT made and entered into by and between the Commissioner of the General Land Office of the State of Texas, whose address is Stephen F. Austin Building, 1700 North Congress, Austin, Texas, 78701, hereinafter called "Lessor", hereunto authorized by the School Land Board, pursuant to the provisions of Chapters 32, 34 and 52 of the Natural Resources Code (hereinafter called N.R.C.), and amendments thereto, and all applicable rules promulgated by the School Land Board, and Seneca Resources Corporation, whose address is 333 Clay St., Suite 4150, Houston, Texas 77002, hereinafter called "Lessee".

1. Lessor, in consideration of Three Hundred Seventy Five and 00/100 Dollars ($375.00), receipt of which is hereby acknowledged, and of the covenants and agreements of Lessee hereinafter contained, does hereby grant, lease, and let unto Lessee the land covered hereby for the purposes and with the exclusive right of exploring, drilling, mining and operating for, producing and owning oil, gas, and all other hydrocarbons, produced from the land covered hereby. The land covered hereby, herein called "said land" is located in the County of Brazos, State of Texas, and is described as follows:

3 acres of land, more or less, situated in said Brazos County, Texas, more particularly described in Exhibit "A"

attached hereto and made a part hereof together with a plat, attached hereto as Exhibit "B", depicting said right-of-way and surrounding area for purposes of illustration only.

For the purpose of determining the amount of any bonus or other payment hereunder, said land shall be deemed to contain 3 acres, whether actually containing more or less, and the above recital of acreage shall be deemed to be the true acreage thereof. Lessor accepts the bonus as lump sum consideration for this lease and all rights and options hereunder.

2. PRIMARY TERM: This lease, which is a "paid up" lease requiring no rentals, shall remain in force for a term of one (1) year from November 2, 1993, hereinafter called "primary term", and as long thereafter as operations, as hereinafter defined, are conducted upon said land with no cessation for more than ninety (90) consecutive days.

3. ROYALTIES: As royalty Lessee covenants and agrees:

(a) To deliver to the credit of Lessor, in the pipe line to which Lessee may connect its well, the equal three sixteenth (3\16) part of all oil produced and saved by Lessee from said land, or from time to time, at the option of Lessee, to pay Lessor the average posted market price of such three sixteenth (3\16) part of such oil at the wells as of the day it is run to the pipe line or storage tanks, Lessor's interest, in either case, to bear none of the cost of treating oil to render it marketable pipe line oil;

(b) To pay Lessor on gas and casinghead gas produced from said land (1) when sold by lessee, three sixteenth (3\16) of the amount realized by Lessee, computed at the mouth of the well, or (2) when used by Lessee off said land or in the manufacture of gasoline or other products, the market value, at the mouth of the well, of three sixteenth (3\16) of such gas and casinghead gas.

(c) If, at the expiration of the primary term or at any time or times thereafter, there is any well on said land or on lands with which said land or any portion thereof has been pooled, capable of producing oil or gas, and all such wells are shut-in, this lease shall, nevertheless, continue in force as though operations were being conducted on said land for so long as said wells are shut-in, and thereafter this lease may be continued in force as if no shut-in had occurred.

(d) Lessee covenants and agrees to use reasonable diligence to produce, utilize, or market the minerals capable of being produced from said wells, but in the exercise of such diligence, Lessee shall not be obligated to install or furnish facilities other than well facilities and ordinary lease facilities of flow lines, separator, and lease tank, and shall not be required to settle

labor trouble or to market gas upon terms unacceptable to Lessee.

(e) If at any time or times after the expiration of the primary term, all such wells are shut-in for a period of ninety consecutive days, and during such time there are no operations on said land, then at or before the expiration of said ninety day period, lessee shall pay or tender, by check of lessee, as royalty, the sum of $6.00. Lessee shall make like payments or tenders at or before the end of each anniversary of the expiration of said ninety day period if upon such anniversary this lease is being continued in force solely by reason of the provisions of this paragraph. Each such payment or tender shall be made to the parties who at the time of payment would be entitled to receive the royalties which would be paid under this lease if the wells were producing. Nothing herein shall impair lessee's right to release as provided in paragraph 5 hereof. In the event of assignment of this lease in whole or in part, liability for payment hereunder shall rest exclusively on the then owner or owners of this lease, severally as to acreage owned by each.

(f) All royalties not taken in kind shall be paid to the Commissioner of the General Land Office at Austin, Texas, in the following manner:

Royalty on oil is due and must be received in the General Land Office on or before the 5th day of the second month succeeding the month of production, and royalty on gas is due and must be received in the General Land Office on or before the 15th day of the second month succeeding the month of production, accompanied by the affidavit of the owner, manager, or other authorized agent, completed in the form and manner prescribed by the General Land Office and showing the gross amount and disposition of all oil and gas produced and the market value of the oil and gas, together with a copy of all documents, records or reports confirming the gross production, disposition and market value including gas meter readings, pipeline receipts, gas line receipts and other checks or memoranda of amount produced and put into pipelines, tanks, or pools and gas lines or gas storage, and any other reports or records which the General Land Office may require to verify the gross production, disposition and market value. In all cases the authority of a manager or agent to act for the Lessee herein must be filed in the General Land Office. Each royalty payment shall be accompanied by a check stub, schedule, summary or other remittance advice showing by the assigned General Land Office lease number the amount of royalty being paid on each lease. If Lessee pays his royalty on or before thirty (30) days after the royalty payment was due, the Lessee owes a penalty of 5% on the royalty or $25.00, whichever is greater. A royalty payment which is over thirty (30) days late shall accrue a penalty of 10% of the royalty due or $25.00, whichever is greater. In addition to a penalty, royalties shall accrue interest at a rate of 12% per year; such interest will begin accruing when the royalty is sixty (60) days overdue.

Affidavits and supporting documents which are not filed when due shall incur a penalty in an amount set by the General Land Office administrative rule which is effective on the date when the affidavits or supporting documents were due. The Lessee shall bear all responsibility for paying or causing royalties to be paid as prescribed by the due date provided herein. Payment of the delinquency penalty shall in no way operate to prohibit the State's right of forfeiture as provided by law nor act to postpone the date on which royalties were originally due. The above penalty provisions shall not apply in cases of title dispute as to the State's portion of the royalty or to that portion of the royalty in dispute as to fair market value. The State shall have first lien upon all oil and gas produced from the area covered by this lease to secure the payment of all unpaid royalty and other sums of money that may become due to the State hereunder.

4. POOLING: (a) Lessee is hereby granted the right, at its option, to pool or unitize any land covered by this lease with any other land covered by this lease, and/or with any other land, lease, or leases, as to any or all minerals or horizons. Units pooled for oil hereunder shall not exceed 160 acres each in area, and units pooled for gas hereunder shall not exceed in area 640 acres each plus a tolerance of ten percent (10%) thereof, unless oil or gas units of a greater size are allowed under or prescribed by rules of the Railroad Commission of Texas. A unit established hereunder shall be valid and effective for all purposes of this lease even though there may be mineral, royalty, or leasehold interests in lands within the unit which are not effectively pooled or unitized. Any operations conducted on any part of such unitized land shall be considered, for all purposes, except the payment of royalty, as operations conducted upon said land under this lease. There shall be allocated to the land covered by this lease within each such unit (or to each separate tract within the unit if this lease covers separate tracts within the unit) the proportion of the total production of unitized minerals from the unit, after deducting any used in lease or unit operations, which the number of surface acres in such land (or in each such separate tract) covered by this lease within the unit bears to the total number of surface acres in the unit, and the production so allocated shall be considered for all purposes, including payment or delivery of royalty, overriding royalty and any other payments out of production, to be the entire production of unitized minerals from the land to which allocated in the same manner as though produced therefrom under the terms of this lease. The owner of the reversionary estate of any term royalty or mineral estate agrees that the accrual of royalties pursuant to this paragraph or of shut-in royalties from a well on the unit shall satisfy any limitation of term requiring production of oil or gas. The formation of any unit hereunder which includes land not covered by this lease shall not have the effect of exchanging or transferring any interest under this lease (including, without limitation, any shut-in royalty which may become payable under this lease) between

parties owning interests in land covered by this lease and parties owning interests in land not covered by this lease. Neither shall it impair the right of Lessee to release as provided in paragraph 5 hereof, except that Lessee may not so release as to lands within a unit while there are operations thereon for unitized minerals unless all pooled leases are released as to lands within the unit. At any time while this lease is in force Lessee may dissolve any unit established hereunder by filing for record in the public office where this lease is recorded a declaration to that effect, if at that time no operations are being conducted thereon for unitized minerals. Subject to the provisions of this paragraph 4, a unit once established hereunder shall remain in force for so long as any lease subject thereto shall remain in force. If this lease now or hereafter covers separate tracts, no pooling or unitization of royalty interests as between any such separate tracts is intended or shall be implied or result merely from the inclusion of such separate tracts within this lease but Lessee shall nevertheless have the right to pool or unitize as provided in this paragraph 4 with consequent allocation of production as herein provided. As used in this paragraph 4, the words "separate tract" mean any tract with royalty ownership differing, now or hereafter, either as to parties or amounts, from that as to any other part of the leased premises.

(b) Neither unit production of oil or gas, nor unit operations, nor payment of shut-in royalties from a unit gas well, shall serve to hold the lease in force as to any area outside the unit, regardless of whether the production, maintenance of a shut-in gas well, or operations are actually located on the State tract or not.

(c) Lessee agrees to file with the General Land Office a copy of any unit designation which this lease is included within ninety (90) days of such designation.

5. RELEASE: Lessee may relinquish the rights granted hereunder to the State at any time by recording the relinquishment in the county where this area is situated and filing the recorded relinquishment or certified copy of same in the General Land Office within ninety (90) days after its execution accompanied by the prescribed filing fee. Such relinquishment will not have the effect of releasing Lessee from any liability theretofore accrued in favor of the State.

6. REWORK: If at any time or times during the primary term operations are conducted on said land and if all operations are discontinued, this lease shall thereafter terminate at the end of the primary term or on the ninetieth day after discontinuance of all operations, whichever is the later date, unless on such later date either (1) Lessee is conducting operations or (2) the shut-in well provisions of paragraph 3 or the provisions of paragraph 9 are applicable. Whenever used in this lease the word "operations" shall mean operations for and any of the following: drilling,

testing, completing, reworking, recompleting, deepening, plugging back or repairing of a well in search for or in an endeavor to obtain production of oil or gas, or production of oil or gas in paying quantities.

7. MINERAL USE: Lessee shall have the use, free from royalty, of oil and gas produced from said land in all operations hereunder.

8. NOTICE: In the event Lessor considers that Lessee has not complied with all its obligations hereunder, both express and implied, Lessor shall notify Lessee in writing, setting out specifically in what respects Lessee has breached this contract. Lessee shall then have sixty (60) days after receipt of said notice within which to meet or commence to meet all or any part of the breaches alleged by Lessor. The service of said notice shall be precedent to the bringing of any action by Lessor on said lease for any cause, and no such action shall be brought until the lapse of sixty (60) days after service of such notice on Lessee. Neither the service of said notice nor the doing of any acts by Lessee aimed to meet all or any of the alleged breaches shall be deemed an admission or presumption that Lessee has failed to perform all its obligations hereunder. If this lease is canceled for any cause, it shall nevertheless remain in force and effect as to (1) sufficient acreage around each well as to which there are operations to constitute a drilling or maximum allowable unit under applicable governmental regulations, (but in no event less than forty acres), such acreage to be designated by Lessee as nearly as practicable in the form of a square centered at the well, or in such shape as then existing spacing rules require; and (2) any part of said land included in a pooled unit on which there are operations.

9. FORCE MAJEURE: If, while this lease is in force, at, or after the expiration of the primary term hereof, it is not being continued in force by reason of the shut-in well provisions of paragraph 3 hereof, and Lessee is not conducting operations on said land by reason of (1) any law, order, rule or regulation, (whether or not subsequently determined to be invalid) or (2) any other cause, whether similar or dissimilar, (except financial) beyond the reasonable control of Lessee, the primary term shall be extended until the first anniversary date hereof occurring ninety (90) or more days following the removal of such delaying cause, and this lease may be extended thereafter by operations as if such delay had not occurred.

10. LESSER ESTATE,CLAUSE: If this lease covers a less interest in the oil or gas in all or any part of said land than the entire and undivided fee simple estate (whether lessors interest is herein specified or not), or no interest therein, then the royalties, and other monies accruing from any part as to which this lease covers less than such full interest, shall be paid only in the proportion which the interest therein, if any, covered by this lease bears to the whole and undivided fee simple estate therein.

11. ASSIGNMENTS: This lease may be transferred at any time. All transfers must reference the lease by file number and must be recorded in the county where the land covered hereby is located, and the recorded transfer or a copy certified to by the County Clerk of the county where the transfer is recorded must be filed in the General Land Office within ninety (90) days of the execution date, as provided by N.R.C. Section 52.026, accompanied by the prescribed filing fee. Every transferee shall succeed to all rights and be subject to all obligations, liabilities, and penalties owed to the State by the original Lessee or any prior transferee of the lease, including any liabilities to the State for unpaid royalties.

12. WELL INFORMATION: Lessee agrees to forthwith furnish Lessor, upon written request, with copies of all drilling logs, electrical logs, cores and core records and other information pertaining to all wells drilled by lessee either on the leased premises or acreage pooled therewith, when requested to do so. Said information shall remain confidential as required by statute.

13. SURFACE: Notwithstanding anything herein to the contrary, it is agreed that Lessee will not conduct any exploration or drilling on the surface of the leased premises or use the surface in the exercise of any rights herein granted. Any development of said land shall be by means of a directional well located off the leased premises, or by pooling of said land with other land, lease or leases as hereinabove provided.

14. COMPENSATORY ROYALTY: Lessee shall pay a compensatory royalty if this lease is not being held by production on the leased premises, by production from a pooled unit, or by payment of shut-in royalties in accordance with the terms of this lease, and if oil or gas is sold or delivered in paying quantities from a well located within 2500 feet of the leased premises and completed in a producible reservoir underlying the area leased hereunder or in any case in which drainage is occurring. Such compensatory royalty shall be paid at the royalty rate provided in this lease based on the value of production from the well as provided in the lease on which such well is located. The compensatory royalty shall be paid in the same proportion that the acreage of this lease has to the acreage of the proration unit surrounding the draining well plus the acreage of this lease. The compensatory royalty shall be paid monthly to the Commissioner of the General Land Office on or before the last day of the month after the month in which the oil or gas is sold and delivered from the well causing the drainage or from the well located within 2500 feet of the leased premises and completed in a producible reservoir under this lease. Notwithstanding anything herein to the contrary, compensatory royalty payable hereunder shall be no less than an amount equal to $12.00, and shall maintain this lease in effect for so long as such payments are made as provided herein.

15. FORFEITURE: If Lessee shall fail or refuse to make payment of any sum within thirty (30) days after it becomes due, or if Lessee or an authorized agent should knowingly make any false return or false report concerning production or drilling, or if Lessee shall fail or refuse to drill any offset well or wells in good faith as required by law and the rules and regulations adopted by the Commissioner of the General Land Office, or if Lessee should fail to file reports in the manner required by law or fail to comply with rules and regulations promulgated by the General Land Office, or refuse the proper authority access to the records pertaining to operations, or if Lessee or an authorized agent should knowingly fail or refuse to give correct information to the proper authority, or knowingly fail or refuse to furnish the General Land Office a correct log of any well, or if this lease is pooled or assigned and the unit designation or assignment is not filed in the General Land Office as required by law, the rights acquired under this lease shall be subject to forfeiture by the Commissioner, and he shall forfeit same when sufficiently informed of the facts which authorize a forfeiture, and when forfeited the area shall again be subject to lease. However, nothing herein shall be construed as waiving the automatic termination of this lease by operations of law or by reason of any special limitation arising hereunder. Forfeitures may be set aside and this lease and all rights thereunder reinstated before the rights of another intervene upon satisfactory evidence to the Commissioner of the General Land Office of future compliance with the provisions of the law and of this lease and the rules and regulations that may be adopted relative hereto.

16. RAILROAD COMMISSION: No natural gas or casinghead gas, including both associated and non-associated gas, produced from the mineral estate subject to this lease may be sold or contracted for sale to any person for ultimate use outside the State unless the Railroad Commission of Texas, after notice and hearing as provided in Title 3 of the N.R.C., finds that:

(a) the person, agency, or entity that executed the lease in question does not require the natural gas or casinghead gas to meet its own existing needs for fuel;

(b) no private or public hospital, nursing home, or other similar health-care facility in this state requires the natural gas or casinghead gas to meet its existing needs for fuel;

(c) no public or private school in this state that provides elementary, secondary, or higher education requires the natural gas or casinghead gas to meet its existing needs for fuel;

(d) no facility of the State or of any county, municipality, or other political subdivision in this state requires the natural gas or casinghead gas to meet its existing needs for fuel;

(e) no producer of food and fiber requires the natural gas or casinghead gas necessary to meet the existing needs of irrigation pumps and other machinery directly related to this

production; and

(f) no person who resides in this state and who relies on natural gas or casinghead gas to provide in whole or part his existing needs for fuel or raw material requires the natural gas or casinghead gas to meet those needs; provided, however, after notice and hearing as provided in Title 3 of the N.R.C., the Railroad Commission of Texas may grant exceptions to these provisions of Subchapter H of Chapter 52 of the N.R.C. if it finds and determines that enforcement of such provisions:

(1) would cause physical waste as defined in Title 3 of the N.R.C.; or

(2) would unreasonably deny to the Lessee an opportunity to produce economically hydrocarbons from the land subject to this lease.

IN TESTIMONY WHEREOF, witness the signature of the Commissioner of the General Land Office, under the seal of the General Land Office, effective as of November 2, 1993.

Garry Mauro

GARRY MAURO
COMMISSIONER OF THE GENERAL LAND OFFICE
OF THE STATE OF TEXAS

Approved:
Energy: RH
Legal(Form): [illegible]
Executive: [illegible]

Brazos County
CSJ 50-2-7 and 8
S.H. 6
No. 424

Exhibit "A"

Being 3.00 acres of land, more or less, situated in the J. M. Barrera Survey in Brazos County, Texas. Said 3.00 acres being the same land conveyed to the State from the Federal Trust Company, Independent Executor and Trustee of the R. N. Little Estate, as recorded in Volume 80, Page 532, of the Deed Records of Brazos County, Texas. Said 3.00 acres being a strip of land 100.00 feet in width, 50.00 feet either side of the centerline of S.H. 6 which is more particularly described as follows, to wit;

Beginning at a point on the east line of the R. N. Little property also being the Hudson - Barrera Survey line, where it intersects the centerline of S.H. 6 at Engineer's Centerline Station Number 1172+50. Said point being further located as north 512.00 feet from the west corner of the H. G. Hudson Survey;

Thence due north along the Hudson-Barrera Survey line, a distance of 124.00 feet to a point, being 50.00 feet from and at right angles to the centerline of S.H. 6;

Thence N 38° 23' 00" W, along the north right of way line of said highway, a distance of 232.00 feet to a point 50.00 feet from and at right angles to Engineer's Centerline Station Number 1168+91.00. Said point being the P.T. of a 01° 00' curve to the left whose central angle is 07° 50';

Thence, around said curve, along the north right of way line, a distance of 783.30 feet to the P.C. of said curve, being 50.00 feet from and at right angles to Engineer's Centerline Station Number 1161+07.70;

Thence N 46° 13' 00" W, along the north right of way line, a distance of 190.00 feet to a point on the west line of the R. N. Little property;

Thence departing from the north right of way line, due south, along said west line, a distance of 62.00 feet crossing the centerline of S.H. 6 at Engineer's Centerline Station Number 1159+20.00 and continuing on for a total distance of 124.00 feet to a point on the south right of way line of said highway;

Thence S 46° 13' 00" E, along the south right of way line, a distance of 127.00 to the P.C. of a 01° 00' curve to the right, whose central angles is 07° 50', 50.00 feet from and at right angles to Engineer's Centerline Station Number 1161+07.70;

Thence, along the south right of way line, around said curve, a distance of 783.30 feet to the P.T. of said curve, 50.00 from and at right angles to Engineer's Centerline Station Number 1168+91.00;

Thence S 38° 23' 00" E, along the south right of way line, a distance of 395.00 feet to a point on the Hudson - Barrera Survey line, being the Point of Beginning of the tract herein described and contains 3.00 acres.

Being as indicated on the official right of way map which is on file with the Texas Department of Transportation and is identified under Control Numbers 50-2-7 and 8.

424

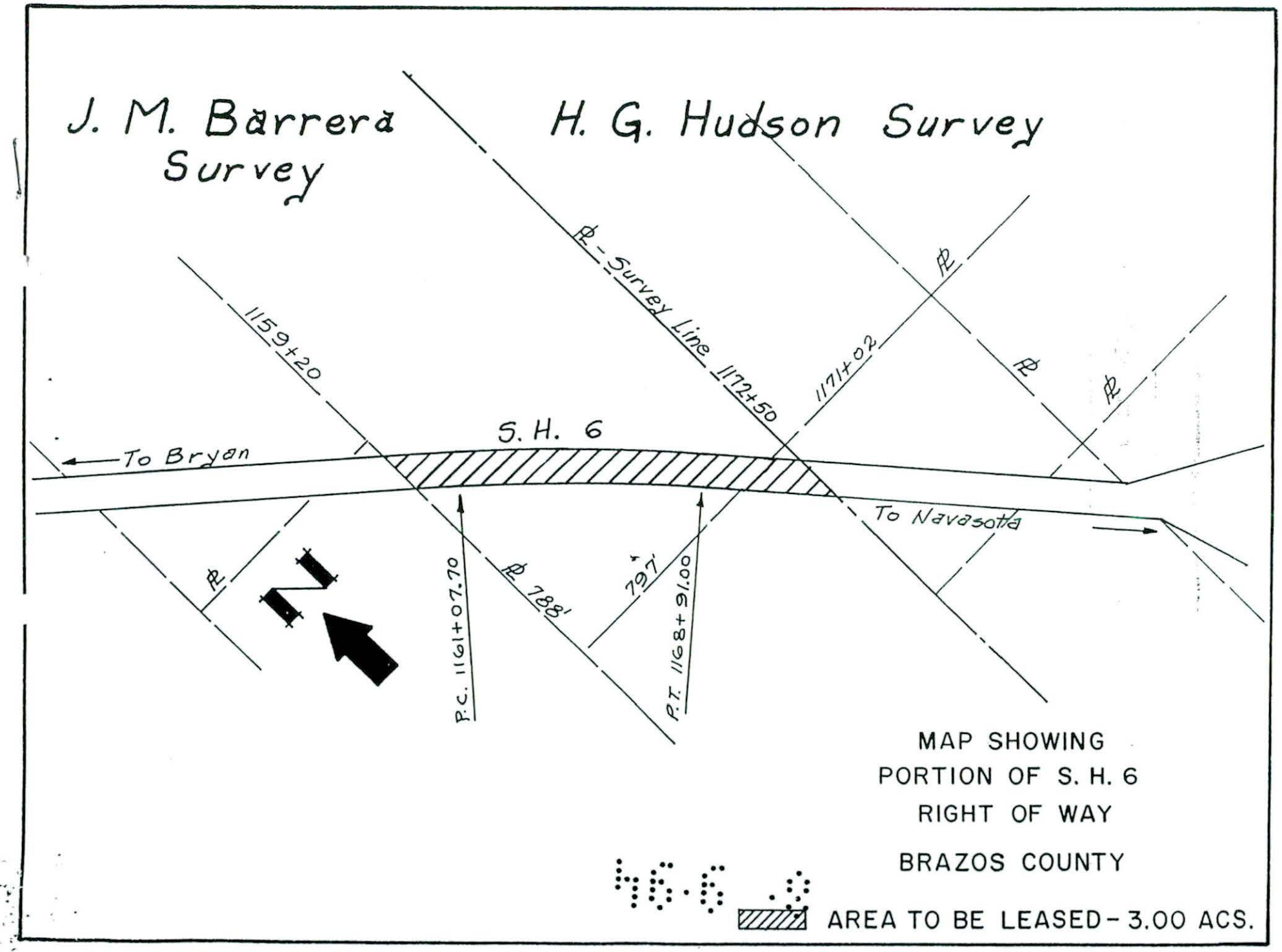

MAP SHOWING
PORTION OF S. H. 6
RIGHT OF WAY
BRAZOS COUNTY

46.6

FIELD NOTES
DALE RESOURCES, INC.
BARRERA NO. 2 WELL UNIT
BRAZOS COUNTY, TEXAS
DECEMBER 20, 1993

All that certain lot, tract or parcel of land being 561.97 acres and being called the DALE RESOURCES, INC. - BARRERA NO. 2 WELL UNIT situated in the J. M. BARRERA SURVEY, Abstract No. 68, H. G. HUDSON SURVEY, Abstract No. 140, C. RAINEY SURVEY, Abstract No. 201, A. MILLER SURVEY, Abstract No. 165, and the A. HOUSTON SURVEY, Abstract No. 133, Brazos County, Texas, said 561.97 acre unit being all or a part of the following described tracts;

1. Being the Louise Porter et al 34.26 Mineral acre tract, same being a part of that certain Called 314 acre tract out of a 344 acre tract as described in Volume 105, Page 295;
2. Being the Dale Resources 63.21 Mineral acre tract, same being a part of that certain Called 130.00 acre tract as described in Volume 75, Page 107;
3. Being the First American Bank of Bryan 2.15 Mineral acre tract, same being all of that certain Called 3.00 acre tract as described in Volume 1163, Page 701;
4. Being the N. M. Greer et ux 2.14 Mineral acre tract, same being all of that certain Called 3.00 acre tract as described in Volume 304, Page 159;
5. Being the Frank Thurman, Jr. et al 0.97 Mineral acre tract, same being all of that certain Called 0.303 acre tract and that certain Called 0.734 acre tract as described in Volume 1057, Page 348 and Volume 994, Page 350, respectively;
6. Being the W. D. Fitch 2.63 Mineral acre tract, same being all of that certain Called 2.741 acre tract as described in Volume 1010, Page 519;
7. Being the Emilio Ayche et al 37.84 Mineral acre tract, same being a part of that certain Called 60.00 acre tract as described in Volume 1163, Page 647;
8. Being the Lawrence Fraser 37.19 Mineral acre tract, same being a part of that certain Called 16.71 acre tract and a part of that certain Called 80.31 acre tract as described in Volume 856, Page 629, and Volume 959, Page 388, respectively;
9. Being the STATE OF TEXAS 15.62 Mineral acre tract, same being a part of that certain Called 47.36 acre tract and all of that certain State right-of-way tract out of 17 acres as described in Volume 1773, Page 15 and Volume 81, Page 242, respectively;
10. Being the Jane Edwards 66.70 Mineral acre tract, same being a part of that certain Called 193.10 acre tract as described in Volume 64, Page 327;
11. Being the J. B. Daugherty et al 21.94 Mineral acre tract, same being all of that certain Called 17.0 acre tract as described in Volume 151, Page 397;
12. Being the Mills P. Walker Estate and D. Mike 33.62 Mineral acre tract, same being a part of that certain Called 1541 acre tract as described in Volume 29, Page 525;
13. Being the Robert Becker et al 28.64 Mineral acre tract, same being all of that certain Called 28.10 acre tract as described in Volume 292, Page 552;

1. JR
2. DOTO File
Barrera #2

ROBERT E. JACK, ATTORNEY AT LAW

FAX TRANSMITTAL FORM

DATE: February 15, 1994

TO: Mr. Robert C. Williams, Land Manager, Seneca Resources Corp.

FAX NUMBER: 713/655-2240

FROM: **Robert E. Jack, Attorney at Law**
P. O. Box 1257
Cameron, Texas 76520
Telephone Number: (Voice) 817/697-4130
Telephone Number: (Fax) 817/697-2626

NUMBER OF PAGES, INCLUDING THIS TRANSMITTAL SHEET: 3 PAGE(S) SENT

IF YOU ARE NOT RECEIVING CLEARLY, OR IF YOU HAVE ANY PROBLEM WITH THIS TRANSMISSION, PLEASE CALL US BACK IMMEDIATELY AT 817/697-4130.

COMMENTS:
Dear Mr. Williams:

As requested by you during the course of our telephone conversation on February 14, 1994, following this cover sheet you will find a copy of the revised plat of the Barrera No. 2 Unit. The most important changes were the removal of part of Tract 8 from the Unit, and a correction of the size of the State Right-of-Way where it crosses the easternmost boundary of Tract 19.

Also, following this cover sheet you will find a copy of a separate plat prepared for me by the surveyor which shows the actual amount of acreage in the original State Right-of-Way between Tracts 11 and 12. (Due to the number of mineral boundaries which do not coincide with each other, and the small physical size of the paper used for recording the Unit Plat, the Surveyor had to omit many boundary lines for the sake of clarity.) Please recall that the acreage in the State ROW which you have under lease is the original 100' ROW conveyed to the State in the early 1930's and is **NOT** the ROW as presently evidenced on the ground.

Additionally, and as discussed with you, I have been asked to prepare (and should have out this week) a revised Unit Declaration. However, as indicated in Exhibit "C" to the opinion letter, there are many individuals and entities who appear (from the public record) to have the right to control whether or not their undivided interest are pooled into the unit. Conversely, you indicated to me that you had unrecorded documents which, in many instances, placed such right in Seneca's name. Obviously I cannot comment on such documents as they have not been available to me, nor have I been asked to review same. However, I am sure Dale will be interested in such documentation as it would allow that company to make the necessary legal and business decisions as to whether or not the failure to join all the record title owners of interests in the minerals in the execution of the unit designation could lead, at a later date, to litigation and claims for damages.

Very truly yours,

Robert E. Jack

REJ/pb

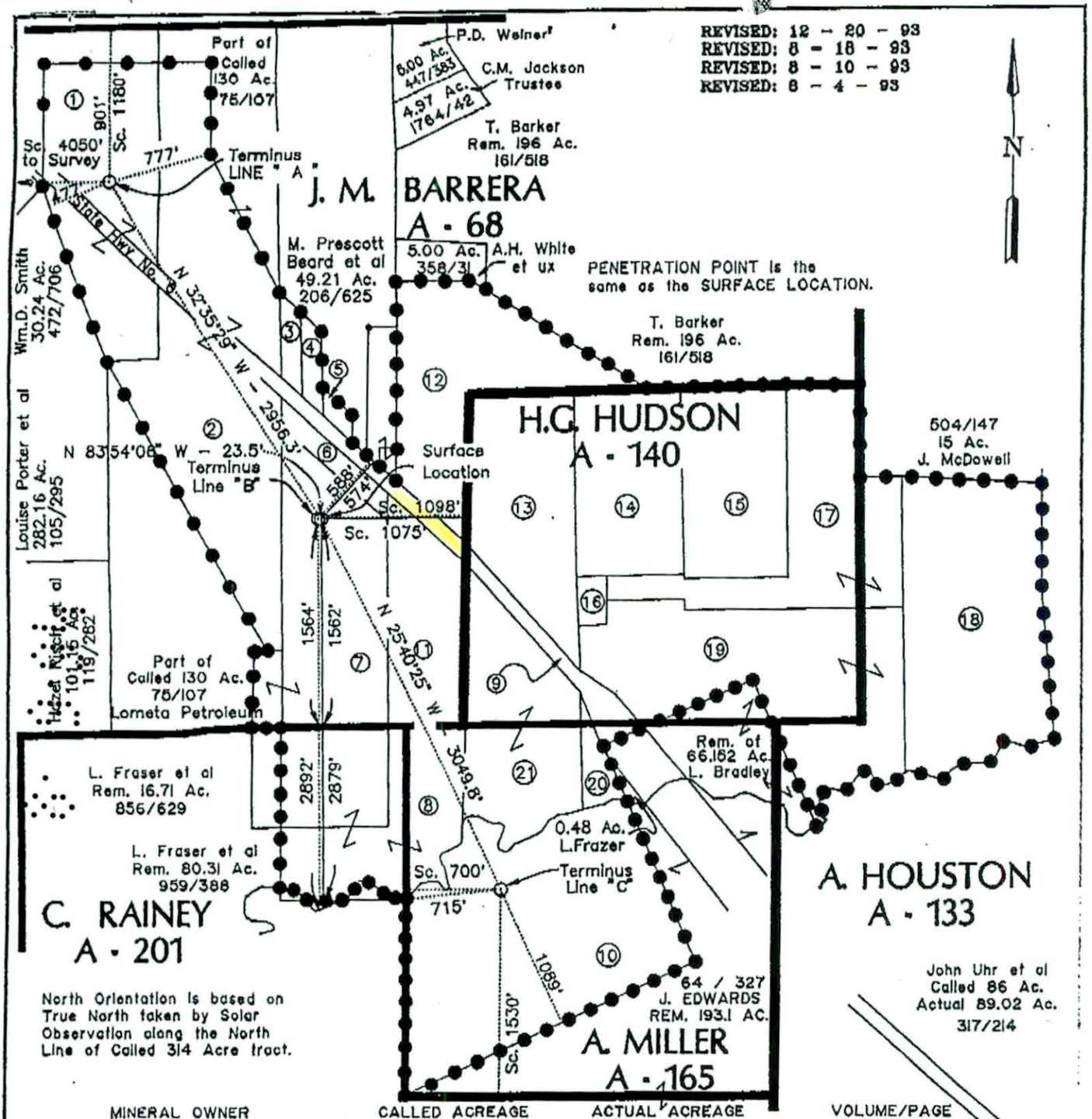

	MINERAL OWNER	CALLED ACREAGE	ACTUAL ACREAGE	VOLUME/PAGE
1	Louise Porter, et al	Part of 314.0 out of 344.0	34.26	105/295
2	Dale Resources	Part of 130.0	63.21	75/107
3	1st American Bank	3.00	2.15	1163/701
4	N.M. Greer et ux	3.00	2.14	304/159
5	Frank Thurman,Jr.et al	1.037	0.97	1057/348 & 994/350
6	W. D. Fitch	2.741	2.63	1010/519
7	Emilio Ayche et al	Part of 60.0	37.84	1163/647
8	Lawrence Fraser et al	Part of 16.71 & Part of 80.31	37.19	856/629 & 959/388
9	STATE OF TEXAS et al	Part of 47.36 & Res.17.0	15.62	1773/15 & 81/242
10	Jane Edwards	Part of 193.1	66.70	64/327
11	J.B. Daugherty et al	17.0	21.94	151/397 Ref.30/428
12	Est.of Mills P. Walker & D.Mike	5.64 & Part of 196.0	33.62	161/518 Ref.29/525 & 30/432
13	Robert Becker et al	28.10	28.64	292/552
14	Robert Becker et al	25.0	24.88	193/423
15	Robert Becker et al	25.0	24.97	740/765
16	Gus Bradley, Jr. et al	1.81	1.82	452/897
17	Lawrence Bradley et al	33.076	33.076	1329/191
18	Tom Barker et al	55.0	49.88	161/518
19	J.D. Langley et ux	Part of 66.152	51.874	1329/191 Ref.1461/276
20	Lawrence Fraser et al	Part of 3.0	3.07	254/853
21	J. W. Sims et al	20.4	25.49	226/107

TOTAL 561.97 ACRES

I, H. CURTIS STRONG, REGISTERED PROFESSIONAL LAND SURVEYOR NO. 4961, DO HEREBY CERTIFY THAT THE WELL LOCATION AS SHOWN WAS STAKED ON THE GROUND AND IS TRUE AND CORRECT TO THE BEST OF MY KNOWLEDGE.

H. Curtis Strong

H. CURTIS STRONG, R.P.L.S. NO. 4961

STATE OF TEXAS HORACE CURTIS STRONG 4961 REGISTERED PROFESSIONAL LAND SURVEYOR

DALE OPERATING COMPANY

BARRERA NO. 2

H.G. HUDSON, J.M. BARRERA, A. MILLER, C. RAINEY, & A. HOUSTON SURVEYS
BRAZOS COUNTY, TEXAS

Scale: 1" = 1000' May 11, 1993

PREPARED BY: Garrett Engineering
Bryan, Tx. 77802 Ph. (409) 846 - 2888

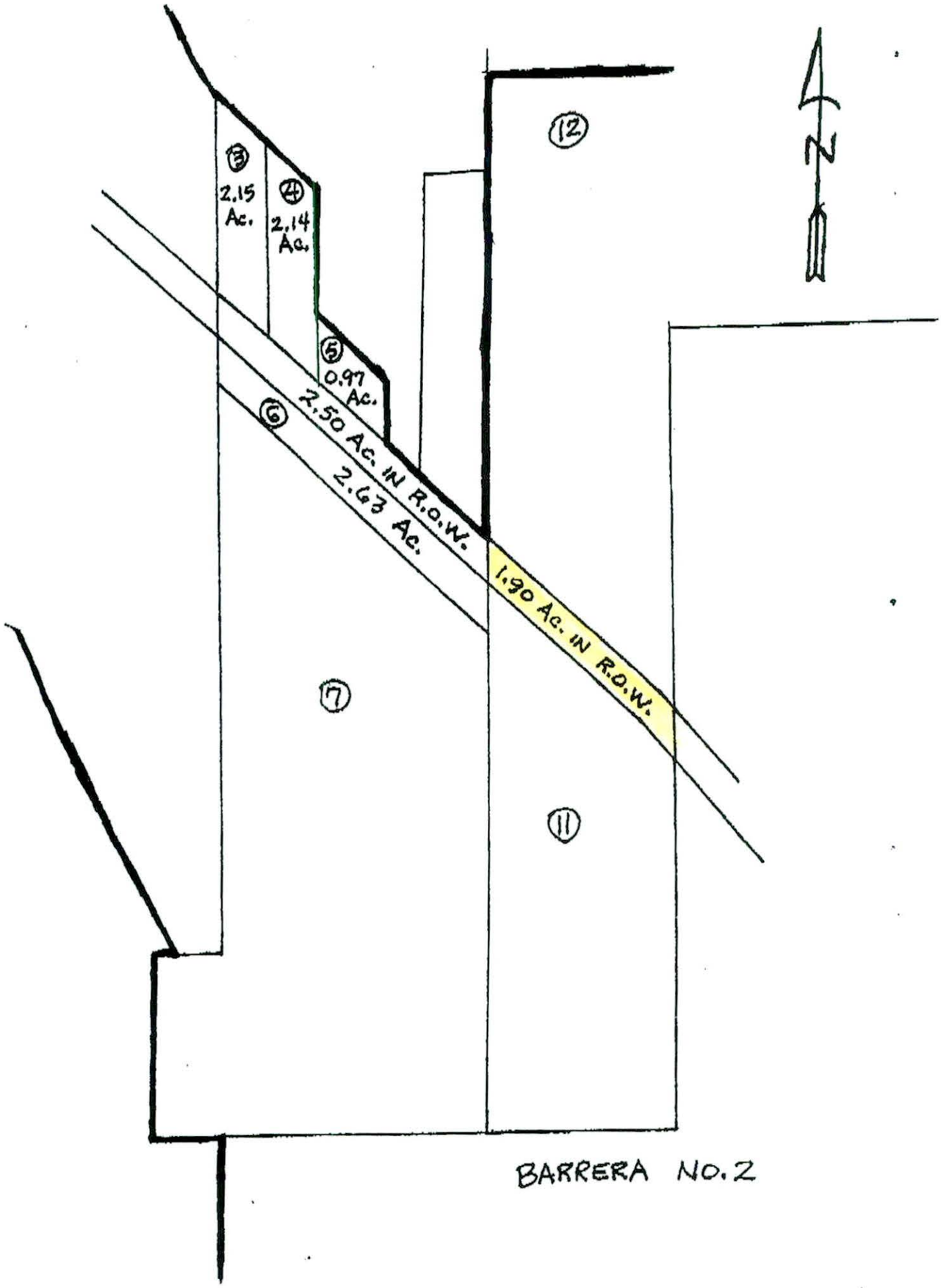
3
2.15 Ac.
4
2.14 Ac.
5
0.97 Ac.
6
2.50 Ac. IN R.O.W.
2.63 Ac.
1.90 Ac. IN R.O.W.
7
11
12
N

BARRERA NO. 2

ROBERT E. JACK
ATTORNEY AT LAW
706 NORTH TRAVIS
P. O. BOX 1257
CAMERON, TEXAS 76520

817/697-4130
FAX# 817/697-2526

Rockdale # 512-446-5332

February 4, 1994

DIVISION ORDER TITLE OPINION

Dale Resources, Inc.
Dale Operating Company
Hartford Building, Suite 1040
400 N. St. Paul Street
Dallas, Texas 75201

Reference: Proposed Dale Resources, Inc. Barrera #2 Unit covering 561.97 acres, Brazos County, Texas,

Dear Sirs:

At your request, I have examined the record title to the propety intended to be included within the above referenced unit. A copy of the surveyor's plat of the proposed unit provided to this office is attached hereto as Exhibit "A" and incorporated herein by reference.

Based upon my examination of the record title, as described hereinafter, I am of the opinion that the parties named in Exhibit "B" attached hereto and incorporated herein by reference are the owners of the oil and gas mineral estate in the property described in Exhibit "A" and own the minerals in such unit, under the terms of the leases, the instrument creating such unit, and other instruments of record affecting such leases and unit, in the shares indicated.

The foregoing opinion as to ownership is subject to the comments, requirements, and limitations as contained in Exhibit "C" attached hereto and incorporated herein by reference.

Thank you for allowing this office to be of assistance to you in this matter.

Very truly yours,

Robert E. Jack

REJ/pb
cc: Lometa Petroleum Corporation
400 Graham Road
College Station, Texas 77845

EXHIBIT "B"

OWNERSHIP INTERESTS

Barrera #2

H. Kempner Uninc.
Address unknown
.0261098 X .0095682 .0002498

21 - J. W. Sims
1409 Caudill
College Station, Texas 77840
1/2 X 25.49/561.97 X 1/6 = .0037798

9 - General Land Office of The State of Texas
Stephen F. Austin Building
1700 North Congress
Austin, Texas 78701 *
8.39/561.97 X 1/5 = .0029859
+ (.014930) (.20)
7/8 X 2.50/561.97 X 1/5 = .0007785 *
+ (.004449) (.20)
.895
1/8 X 2.83/561.97 = .0006295 *
+ (.005036)
1.90/561.97 X 3/16 = .0006339 → use this for M95380 tract repat Unit #2349.
(.0033809) (.1895)
Total for State of Texas * (Shneed) Filed 9/29/95 .0050278
TPF M95380 = .0033809

(Snyder)
* .0029859
.0007785
.0006295
.0044394 ÷ .20 =
M95228 = TPF (.021970) X .20 =

10 - Dorothy Jane McCallum Ward
627 Robindale Lane
Fairfield, Texas 75840
1/12 X 66.70/561.97 X .17 .0016814

10 - Mary Edwards Allen
P. O. Box 160
La Pryor, Texas 78872
1/12 X 66.70/561.97 X .17 .0016814

Note: .0029859
.0007785
.0006295
.0006339
.0050278
Total all U.L.R.I

Filed

JACKSON & WALKER, L.L.P.
ATTORNEYS AND COUNSELORS
1100 LOUISIANA, SUITE 4200
P.O. BOX 4771
HOUSTON, TEXAS 77210-4771
TELEPHONE (713) 752-4200

TELECOPIER (713) 752-4221
TELEX 79-1932

OTHER LOCATIONS
DALLAS
FORT WORTH
SAN ANTONIO

April 5, 1994

Seneca Resources Corporation
333 Clay Street
Suite 4150
Houston, Texas 77002

Attention: Mr. Robert C. Williams

Re: Mills P. Walker et al. Leases
Dale Resources, Inc.-Barrera No. 2 Unit
57.46 Acres
José Maria Barrera Survey, A-68,
Brazos County, Texas
Our Firm File No. 002507.00170

Gentlemen:

FIRST SUPPLEMENTAL DIVISION ORDER TITLE OPINION

DESCRIPTION OF LAND

57.46 acres, more or less, out of the José Maria Barrera Survey, A-68, Brazos County, Texas, being the same lands identified as Tracts 11 and 12 in that certain Pooling Agreement and Unit Designation for the Dale Resources, Inc.-Barrera No. 2 Unit, filed August 16, 1993, recorded in Volume 1878, Page 320, Official Records, Brazos County, Texas.

Tract 1:

33.62 acres, more or less, out of the José Maria Barrera Survey, A-68, Brazos County, Texas, being that portion of that certain 1,185-acre tract described in that certain Mineral Deed from M. P. Walker to D. Mike dated January 16, 1932, recorded in Volume 81, Page 242, Deed Records, Brazos County, Texas, situated within the boundary lines of the Dale Resources, Inc.-Barrera No. 2 Unit, described in that certain Pooling Agreement and Unit Designation filed August 16, 1983, recorded in Volume 1878, Page 320, Official Records, Brazos County, Texas.

Tract 2:

21.94 acres (resurvey of 17.00 acres), more or less, out of the José Maria Barrera Survey, A-68, Brazos County, Texas, being that portion of the lands described in that certain Mineral Deed from M. P. Walker to D. Mike dated January 16, 1932, recorded in Volume 81, Page 242, Deed Records, Brazos County, Texas, situated south of State Highway 6.

Tract 3:

1.90 acres, (resurvey of 3.00 acres), more or less, out of the José Maria Barrera Survey, A-68, Brazos County, Texas, being the land described in that certain Deed dated July 7, 1931, from the Federal Trust Company, Independent Executor and Trustee of the R.N. Little Estate, to the State of Texas, recorded in Volume 80, Page 532, Deed Records, Brazos County, Texas.

Said tracts, outlined on the plat attached as Exhibit A to our Original Division Order Title Opinion, are hereinafter referred to as the "Subject Property."

* * * * * * *

DOCUMENTS AND RECORDS EXAMINED

11. Photocopy of plat prepared by Garrett Engineering indicating the acreage contained in Tract 3 of the Subject Property.

12. Photocopy of revised plat for the Barrera No. 2 Unit, prepared by Garrett Engineering.

13. Photocopy of letter dated March 25, 1994, from Robert E. Jack, to Dale Resources, Inc., regarding the Division Order Title Opinion prepared by Jack covering the Barrera No. 2 Unit, together with photocopies of revised pages 31 and 32 of said opinion.

* * * * * * *

This Opinion supplements our Original Division Order Title Opinion dated February 14, 1994, covering the Subject Property (called 55.58 acres) and is issued after examination of the Additional Documents and Records described above. Based solely upon examination of such Additional Documents and Records, and

subject to the disposition of the Comments and Requirements stated in our Original Division Order Title Opinion as set forth below, we find title to that portion of the oil, gas and liquid hydrocarbons produced from the Dale Resources, Inc.-Barrera No. 2 Well attributable to the Subject Property vested as of October 28, 1993, at 5:00 p.m., as hereinafter set forth.

Unit Participation Factor: 57.46/561.97 = .1022475

Royalty and Overriding Royalty:

First Bank & Trust, Bryan, Texas, Trustee under Trust Agreement dated December 8, 1981 1/8 of 1/2 of 33.62/561.97, or	.0037391 RI*
Lucille Dougherty 3/16 of 85% of 1/2 of 33.62/561.97, plus 3/16 of 21.94/561.97, or	.0120875 RI
John M. Lawrence, III 3/16 of 5.25% of 1/2 of 33.62/561.97, or	.0002945 RI
William S. Thornton 3/16 of 3.675% of 1/2 of 33.62/561.97, or	.0002061 RI
Billy M. Payne 3/16 of 3.375% of 1/2 of 33.62/561.97, or	.0001893 RI
Jay Don Watson 3/16 of 2.7% of 1/2 of 33.62/561.97, or	.0001514 RI
State of Texas 3/16 of 1.90/561.97, or	.0006339 RI
F. L. Pool 1/2 of 1/64, of 33.62/561.97, or	.0004674 ORRI
J. J. McCauley, Inc. 1/2 of 3.625% of 33.62/561.97, less 1/2 of .78125% of 33.62/561.97, or	.0008506 ORRI
Alice M. Reese, Individually and as Independent Executrix of the Estate of R.L. Reese, Deceased 1/2 of 2.0625% of 33.62/561.97, plus 1/2 of .78125% of 33.62/561.97, or	.0008506 ORRI

(13) Ltr from Seneca 8/8/94 #195380
Barrera No. 2 well: Field Notes/
Plat, Division Order Title Opinion:
Ownership Interests

Texas General Land Office
Garry Mauro, Commissioner

Stephen F. Austin Building
1700 North Congress Avenue
Austin, Texas 78701-1495
(512) 463-5001

March 12, 1997

Rosewood Resources
Attn: Janet Hambright
Suite 300
200 Crescent Court
Dallas, Tx 75201-9990

Re: Mineral File No. M- 94821, 95228, 95380

Dear Sir or Madam:

We have received the division order submitted by your company for the above referenced lease and filed same in our files. Please be sure to reference this mineral file number in all future royalty payments, reports and correspondence concerning the lease.

The payment of royalties to the State of Texas is set by statute. As the execution of the division order may, in some cases, affect the payments of such royalties, it is not the policy of this office to execute them. Insofar as allowed by law, the Texas General Land Office acquiesces in the sale of oil and gas under the terms and conditions set out in the lease.

If you should have any questions, please feel free to call me at (512) 475-2317 .

Sincerely,

Metha Kester

Metha Kester
Accounts Examiner
Royalty and Revenue Processing
Energy Resources

/mrg

Enclosures

ROSEWOOD
RESOURCES

5: 3/24/97

RECEIVED
97 MAR -7 PM 2:12
ENERGY RESOURCES

February 27, 1997

TO ALL INTEREST OWNERS

Re: **New Division Orders covering Snyder Acquisition**
D/O 5800 thru 5841; 5844, 5848, 5851, & 5862; Austin Chalk Area
Burleson, Brazos, Fayette, Grimes, Lee, & Washington Counties, Texas

Dear Interest Owner:

Rosewood Resources, Inc. has acquired all of the interest owned by Snyder Oil Corporation in approximately 64 wells in the Austin Chalk Area of Texas. Rosewood took over operations of the 40 wells previously operated by Snyder effective as of January 1, 1997.

As a result of our acquisition, Rosewood will take over all revenue disbursements presently being made by Snyder, beginning with January, 1997, production. Rosewood's revenue checks covering the January, 1997, production will be issued around the 25th of March, 1997.

Enclosed are Rosewood's Division Orders for your execution, which detail only your specific interest in the captioned group of wells. Please follow the directions on the enclosed Division Order Instruction Sheet and return one signed division order to the undersigned in the return envelope provided.

The decimals shown on your Exhibit A cover the exact interests previously paid to you by Snyder. If you notice any well name listed twice, but with different tract numbers--then Rosewood has a disbursement responsibility that differs according to whether the product is oil or gas. In this situation, Rosewood's "Tract 0000" covers oil and "Tract 0001" covers gas.

Please give this your prompt attention. We would like to have your signed division order back in our office no later than March 14th. If you should have any questions or require additional information, feel free to call me at (214) 871-5718. Thank you.

Sincerely,

ROSEWOOD RESOURCES, INC.

Janet Hambright
Paralegal

Enclosures

Rosewood Resources, Inc.
Suite 500
100 Crescent Court
Dallas, Texas 75201
214 871 5700

OIL AND GAS DIVISION ORDER

EFFECTIVE DATE: January 1, 1997 production

DIVISION ORDER NUMBER(S): 5800 et al
(Snyder Acq. - See Attachment)

TO: ROSEWOOD RESOURCES, INC.
100 Crescent Court, Suite 500
Dallas, Texas 75201

DATE: February 27, 1997

The undersigned severally and jointly certifies it is the legal owner of the interest listed below, of all the oil, gas, and related hydrocarbons produced from the Austin Chalk properties located in Burleson, Brazos, Fayette, Grimes, Lee, or Washington Counties, Texas, as described on the attached Exhibit A.

(Type of Interest Codes on Exhibit A: 10=WI, 20=RI, 30=ORRI)

THIS AGREEMENT DOES NOT AMEND ANY LEASE OR OPERATING AGREEMENT BETWEEN THE INTEREST OWNERS AND THE LESSEE OR OPERATOR OR ANY OTHER CONTRACTS FOR THE PURCHASE OF OIL OR GAS.

The provisions listed on the next page apply to each owner ("Owner") who executes this agreement. In addition to the legal rights provided by all of the terms and provisions of this division order, each owner may have certain statutory rights under laws of this state.

WITNESSES: (There must be two witnesses to each signature.)

WITNESSES SIGN BELOW	OWNER(S) SIGN BELOW	SOCIAL SECURITY OR TAX ID NUMBER
X _____	X _____	X _____
X _____	Printed Name: _____	Date: _____

IMPORTANT: PLEASE INCLUDE YOUR TAX ID NUMBER OR SOCIAL SECURITY NUMBER IN THE SPACE PROVIDED ABOVE. FAILURE TO PROVIDE TAX ID NUMBER OR SOCIAL SECURITY NUMBER WILL SUBJECT PAYMENTS MADE TO YOU TO BACKUP WITHHOLDING UNDER SECTION 3406 OF THE INTERNAL REVENUE CODE OF 1954, AS AMENDED, AND ANY TAX WITHHELD WILL NOT BE REFUNDABLE.

O/N 131650
STATE OF TEXAS
C/O COMMISSIONER OF THE
GENERAL LAND OFFICE
STEPHEN F. AUSTIN BLDG.
1700 N. CONGRESS AV
AUSTIN TX

DATE: February 27, 1997 **DIVISION ORDER NO.:** 5800 et al - Snyder Acq.

1. **VALUATION AND TERMS OF SALE:** The undersigned will be paid in accordance with the division of interests set out in Exhibit A. Rosewood Resources, Inc. ("Payor") shall pay all parties at the price agreed to by the operator for oil, gas and related hydrocarbons to be sold pursuant to this division order. The purchaser of the oil and gas products ("Purchaser") shall compute quantity and make corrections for gravity and temperature and make deductions for impurities. Unless otherwise expressly provided in Owner's lease(s): (1) Payor is authorized to deduct gathering, transportation, testing, dehydration, compression and other similar post-production charges incurred in connection with readying gas for market; and (2) Settlement on all oil sold shall be based on the net proceeds realized by Payor at the well from such sale, after deducting any costs for gathering, transporting or treating the oil for delivery.

2. **PAYMENT:** From the effective date, payment is to be made monthly by Payor's check, based on this division of interest (1) for oil and its products within sixty (60) days after the end of the calendar month in which oil production is sold; and (2) for gas and its products within ninety (90) days after the end of the calendar month in which gas production is sold, from the property described above, less taxes required by law to be deducted and remitted by Purchaser. Payments of less than $25.00 may be accrued before disbursement until the total amount equals $25.00 or more, or until December 31 of each year, whichever occurs first. Owner agrees to refund to Payor any amounts attributable to an interest or part of an interest that Owner does not own.

3. **INDEMNITY:** Owner agrees to indemnify and hold Payor harmless from all liability resulting from payments made to the Owner in accordance with such division of interest, including but not limited to attorney fees of judgments in connection with any suit that affects the Owner's interest to which Payor is made a party.

4. **DISPUTE; WITHHOLDING OF FUNDS:** If a suit is filed that affects the interest of the Owner, written notice shall be given to Payor by the Owner together with a copy of the complaint or petition filed. In the event a claim or dispute arises that affects title to the division of interest credited herein, Payor is authorized to withhold payments accruing to such interest, without interest, unless otherwise required by applicable statute, until the claim or dispute is settled.

5. **TERMINATION:** Termination of this agreement is effective on the first day of the month that begins after the 30th day after the date written notice of termination is received by either party.

6. **NOTICES:** (1) The Owner agrees to notify Payor in writing of any change in the division of interest, including changes of interest contingent on payment of money or expiration of time. (2) No change of interest is binding on Payor until the recorded copy of the instrument of change or documents satisfactorily evidencing such change are furnished to Payor at the time the change occurs. (3) Any change of interest shall be made effective on the first day of the month following receipt of such notice by Payor. (4) Any correspondence regarding this agreement shall be furnished to the addresses listed unless otherwise advised by either party.

EXHIBIT A
Rosewood Resources, Inc.
Owner Number Cross-Reference to D.O.

131650 STATE OF TEXAS
C/O COMMISSIONER OF THE
GENERAL LAND OFFICE
STEPHEN F. AUSTIN BLDG.
1700 N. CONGRESS AVE., RM #640
AUSTIN TX 78701

Company	D.O.	Tract	Well Name/Description	Status	Type	Decimal
214	5801	0000	BARRERA #1 MF94821 566.59 ACRES IN THE STERRETT D. SMITH SURVEY, A-210, AND THE J.M. BARRERA SURVEY, A-68 -- LIMITED TO THE SUBSURFACE DEPTH INTERVAL FROM 10,800 FEET TO 11,330 FEET. BRAZOS COUNTY, TEXAS.	01	20	.00126017
214	5802	0000	BARRERA #2 (OIL) 561.97 ACRES, AS DESCRIBED IN THAT CERTAIN POOLING AGREEMENT AND UNIT DESIGNATION, AS AMENDED, DATED MARCH 16, 1994, RECORDED IN VOLUME 2113, PAGE 24, BRAZOS COUNTY, TEXAS. MF 95228	01	20	.00502780
214	5802	0001	BARRERA #2 (GAS) 561.97 ACRES, AS DESCRIBED IN THAT CERTAIN POOLING AGREEMENT AND UNIT DESIGNATION, AS AMENDED, DATED MARCH 16, 1994, RECORDED IN VOLUME 2113, PAGE 24, BRAZOS COUNTY, TEXAS. 95380	01	20	.00502780
214	5824	0000	LOMETA #1 MF 95228 306 ACRES OUT OF THE H.G. SUDSON SURVEY, A-140; THE A. MILLER SURVEY, A-165; THE ANDREW HOUSTON SURVEY, A-133; THE JESSEE EVANS SURVEY, A-110; AND THE THOMAS MAYS SURVEY, A-161--LIMITED TO SUBSURFACE DEPTHS FROM 10,400' TO 11,620', BRAZOS COUNTY, TEXAS.	01	20	.00640520

.004394
.0006339

Texas General Land Office
Garry Mauro, Commissioner

Stephen F. Austin Building
1700 North Congress Avenue
Austin, Texas 78701-1495
(512) 463-5001

NOV 22 1993

The lease requires operators to submit certain information relative to production and related activities. In addition, when the lessee files various forms with the Texas Railroad Commission and the Department of Energy, he is requested to submit copies of these forms to the General Land Office. Examples of these forms are:

o W-1	Application to Drill, Deepen, or Plug Back with Plat;
o W-2	Oil Well Potential Test, Completion or Recompletion Report and Log;
o W-3	Plugging Record;
o G-1	Gas Well Back Pressure Test Completion/Recompletion Report and Log;
o G-5	Gas Well Classification Report;
o G-10	Gas Well Status Report;
o W-10	Oil and Well Status Report;
o W-12	Inclination Report;
o W-15	Cementing Affidavit;
o L-1	Electrical Logs (any scale and within fifteen days after they are made);
o W-12	Directional Surveys;
o P-12	Certificate of Pooling Authority
o F-1	NGPA Supplemental Application; and
o FERC-121	Application for Determination.

Furthermore, if this land and/or lease is included in a unit, please furnish us with a copy of the written designation of unit filed in the county records.

Type or print only

483-047

..ILROAD COMMISSION OF TEXAS
Oil and Gas Division

Form G-1
Rev. 4/1/83

API No. 42-041 31752

Gas Well Back Pressure Test, Completion or Recompletion Report, and Log

7. RRC District No. 03

8. RRC Gas ID No.

1. FIELD NAME (as per RRC Records or Wildcat): GIDDINGS (AUSTIN CHALK, GAS)

2. LEASE NAME: Barrera

9. Well No. 2

3. OPERATOR'S NAME (Exactly as shown on Form P-5, Organization Report): Dale Operating Company

RRC Operator No. 197624

10. County of well site: Brazos

4. ADDRESS: Hartford Bldg., Suite 1040, Dallas, TX 75201

11. Purpose of filing
- Initial Potential [X]
- Retest [ ]
- Reclass [ ]
- Well record only (Explain in remarks) [ ]

5. Location (Section, Block, and Survey): JM BARRERA A-68

5b. Distance and direction to nearest town in this county: 3 MI N. OF MILLICAN

6. If operator has changed within last 60 days, name former operator

12. If workover or reclass, give former field (with reservoir) & Gas ID or oil lease no.

FIELD & RESERVOIR	GAS ID or OIL LEASE #	Oil—O Gas—G	WELL #

13. Pipe Line Connection: AQUILA SOUTHWEST

14. Completion or recompletion date: AUGUST 28, 1993

15. Any condensate on hand at time of workover or recompletion? [ ] Yes [X] No

16. Type of Electric or other Log Run: NO LOGS RUN

Section I — GAS MEASUREMENT DATA

Date of Test: 9-5-93

Gas Measurement Method (Check One): Orifice Meter [X] ▶ Flange Taps [X] Pipe Taps [ ] Positive Choke [ ] Orifice Vent Meter [ ] Pitot Tube [ ] Critical-flow Prover [ ]

Gas produced during test: 7608 MCF

Run No.	Line Size	Orif. or Choke Size	24 Hr. Coeff. Orif. or Choke	Static P_m or Choke Press	Diff. h_w	Flow Temp. °F	Temp. Factor F_{tf}	Gravity Factor F_g	Compress Factor F_{pv}	Volume MCF/DAY
1	3.068	2.375	44849	1095	54	132	.9372	.8944	1.0929	9991
2	3.068	2.375	44849	1095	36	141	.9302	.8944	1.0866	8050
3	3.068	2.375	44849	1095	22	126	.9420	.8944	1.0974	6436
4	3.068	2.375	44849	1115	17	102	.9619	.8944	1.1211	5956

Section II — FIELD DATA AND PRESSURE CALCULATIONS

Gravity (Dry Gas)	Gravity Liquid Hydrocarbon	Gas-Liquid Hydro Ratio	Gravity of Mixture	Avg. Shut-in Temp.	Bottom Hole Temp.
.750	50.4 Deg. API	8234 CF/Bbl	G_{mix} = 1.758	88 °F	292 °F @ 11477' (Depth)

$D_{eff}^{8/3}$ = 10.8022

$\sqrt{T_f} = \sqrt{668.7} = 25.86$

$\sqrt{GL} = \sqrt{(1.7578)*(11477)} = 142.0357$

$C = \frac{1118 \times (D_{eff})^{8/3}}{\sqrt{T}} = \frac{1118 \times 10.8022}{25.86} = 467$

$\frac{\sqrt{GL}}{C} = \frac{142.0357}{467.04} = .3041$

Run No.	Time of Run Min.	Choke Size	Wellhead Press. PSIA P_w	Wellhead Flow Temp. °F	P_w^2 (Thousands)	R	R^2 (Thousands)	P_1	P_w/P_1
Shut-In			3977	88	15817				
1	360	22/64	3315	132	10989	3038.5	9232.5	4497	.7372
2	360	20/64	3480	141	12110	2448.3	5994.0	4255	.8179
3	360	18/64	3635	126	13213	1957.4	3831.3	4128	.8805
4	360	16/64	3715	102	13801	1811.3	3281.0	4133	.8988

Run No.	F	K	$S = \frac{1}{z}$	E^{ks}	P_f and P_s	P_f^2 and P_s^2 (thousands)	$P_f^2 - P_s^2$ (thousands)
Shut-In		.6902	1.0000	1.9941	7930	62892	
1	1.0000	.5656	1.0000	1.7606	5836	34062	28829
2	1.0000	.5656	1.0000	1.7606	6127	37538	25354
3	1.0000	.5656	1.0000	1.7606	6400	40956	21936
4	1.0000	.5656	1.0000	1.7606	6541	42778	20113

Angle of Slope θ 45.000

n 1.000

Absolute Open Flow 21,796 MCF/DAY

WELL TESTER'S CERTIFICATION: I declare under penalties prescribed in Sec. 91.143, Texas Natural Resources Code, that I conducted or supervised this test and that data and facts shown in Sections I and II above are true, correct, and complete, to the best of my knowledge. Bottomhole temperature and the diameter and length of flow string were furnished by the operator of the well.

C. F. McCoy — Signature: Well Tester

Texas Gas & Oil Co. — Name of Company

RRC Representative

OPERATOR'S CERTIFICATION: I declare under penalties prescribed in Sec. 91.143, Texas Natural Resources Code, that I am authorized to make this report, that I prepared or supervised and directed this report, and that data and facts stated therein are true, correct, and complete, to the best of my knowledge.

Signature: Operator's representative

CONTROLLER — Title

9-14-93 — Date

Tel: 214-979-9010 — A/C Number

SECTION III — **DATA ON WELL COMPLETION AND LOG (Not Required on Retest)**

17. Type of Completion:
[X] HORIZONTAL New Well [X] Deepening [ ] Plug Back [ ] Other [ ]

18. Permit to Drill, Plug Back or Deepen — DATE: 8-6-93 — PERMIT NO.: 412947
Rule 37 Exception — CASE NO.
Water Injection Permit — PERMIT NO.
Salt Water Disposal Permit — PERMIT NO.
Other — PERMIT NO.

19. Notice of Intention to Drill this well was filed in Name of
DALE OPERATING COMPANY

20. Number of producing wells on this lease in this field (reservoir) including this well: 1

21. Total number of acres in this lease: 567.91

22. Date Plug Back, Deepening, WorkOver or Drilling Operations: Commenced 7-5-93 — Completed 8-28-93

23. Distance to nearest well, Same Lease & Reservoir: N/A

24. Location of well, relative to nearest lease boundaries of lease on which this well is located: 574 Feet From NE Line and N62 Feet from SOUTH Line of the BARRENA (AYCHE) Lease

25. Elevation (DF, RKB, RT, GR, ETC.): GR = 267

26. Was directional survey made other than inclination (Form W—12)? [X] Yes [ ] No

27. Top of Pay: 11,136'

28. Total Depth: (A) 11685 TVD, 14161 TMD (B) 11477 TVD, 11514 TMD (C) 11519 TVD, 14525 TMD

29. P. B. Depth: SAME AS #28

30. Surface Casing Determined by: Field Rules [ ] — Recommendation of T.D.W.R. [X] — Railroad Commission (Special) [ ] — Dt. of Letter 6-5-93 — Dt. of Letter

31. Is well multiple completion? [ ] Yes [X] No

32. If multiple completion, list all reservoir names (completions in this well) and Oil Lease or Gas ID No.

FIELD & RESERVOIR	GAS ID or OIL LEASE #	Oil—O Gas—G	WELL #

33. Intervals Drilled by: Rotary Tools X — Cable Tools

34. Name of Drilling Contractor: GREY WOLF DRILLING

35. Is Cementing Affidavit Attached? [X] Yes [ ] No

36. **CASING RECORD (Report All Strings Set in Well)**

CASING SIZE	WT #/FT.	DEPTH SET	MULTISTAGE TOOL DEPTH	TYPE & AMOUNT CEMENT (sacks)	HOLE SIZE	TOP OF CEMENT	SLURRY VOL. cu. ft.
10 3/4"	38#	3305'		1200 SKS S 350 SKS PREM	14 3/4"	SURFACE	3557
7 5/8"	21#	11059		1300 SKS PREM	9 7/8"	CIRCULATE	1950

37. **LINER RECORD**

Size	TOP	Bottom	Sacks Cement	Screen

38. **TUBING RECORD**

Size	Depth Set	Packer Set
2 7/8"	9001	9001

39. Producing Interval (this completion) indicate depth of perforation or open hole

From	To
(A) 11136' TVD	14161' TVD
(B) 11136' TVD	11514' TVD
(C) 11137' TVD	14524' TVD

40. **ACID, SHOT, FRACTURE, CEMENT SQUEEZE, ETC.**

Depth Interval	Amount and Kind of Material Used
N/A	

41. **FORMATION RECORD (LIST DEPTHS OF PRINCIPAL GEOLOGICAL MARKERS AND FORMATION TOPS)**

Formations	Depth	Formations	Depth
AUSTIN CHALK	11136		

REMARKS: THIS WELL HAS THREE HORIZONTAL WELLBORES — A, B, AND C. THEY ARE DESIGNATED AS SUCH ON CORRESPONDING SURVEY PLAT. HORIZONTAL SURVEYS REFERENCE ORIGINAL HOLE (A), SIDETRACK #1 (B), AND SIDETRACK #2 (C).

Cementer: Fill in shaded areas.
Operator: Fill in other items.

Form W-15
Cementing Report
Rev. 4/1/83
483-045

RAILROAD COMMISSION OF TEXAS
Oil and Gas Division

1. Operator's Name (As shown on Form P-5, Organization Report)	2. RRC Operator No.	3. RRC District No.	4. County of Well Site
DALE OPERATING COMPANY	197624	03	Brazos

5. Field Name (Wildcat or exactly as shown on RRC records)	6. API No.	7. Drilling Permit No.
GIDDINGS (AUSTIN CHALK, GAS)	42- 041 31752	412947

8. Lease Name	9. Rule 37 Case No.	10. Oil Lease/Gas ID No.	11. Well No.
Barrera			2

CASING CEMENTING DATA:	SURFACE CASING	INTER-MEDIATE CASING	PRODUCTION CASING		MULTI-STAGE CEMENTING PROCESS	
			Single String	Multiple Parallel Strings	Tool	Shoe
12. Cementing Date	7-7-93					
13. •Drilled hole size	14-3/4					
•Est. % wash or hole enlargement	20%					
14. Size of casing (in. O.D.)	10-3/4					
15. Top of liner (ft.)	—					
16. Setting depth (ft.)	3305.'					
17. Number of centralizers used	5					
18. Hrs. waiting on cement before drill-out	18					
1st Slurry — 19. API cement used: No. of sacks ▶	1200					
1st Slurry — Class ▶	Standard					
1st Slurry — Additives ▶	2% Econolite + 3% Salt + 1/4#/sk Flocele					
2nd Slurry — No. of sacks ▶	350					
2nd Slurry — Class ▶	Premium					
2nd Slurry — Additives ▶	Neat					
3rd Slurry — No. of sacks ▶						
3rd Slurry — Class ▶						
3rd Slurry — Additives ▶						
1st — 20. Slurry pumped: Volume (cu. ft.) ▶	3144					
1st — Height (ft.) ▶	5651.18					
2nd — Volume (cu. ft.) ▶	413					
2nd — Height (ft.) ▶	714.43					
3rd — Volume (cu. ft.) ▶						
3rd — Height (ft.) ▶						
Total — Volume (cu. ft.) ▶	3557					
Total — Height (ft.) ▶	6365.61					
21. Was cement circulated to ground surface (or bottom of cellar) outside casing?	Yes					

22. Remarks

Good Cement Circulated To Surface

OVER ▶

CEMENTING TO PLUG AND ABANDON	PLUG # 1	PLUG # 2	PLUG # 3	PLUG # 4	PLUG # 5	PLUG # 6	PLUG # 7	PLUG # 8
23. Cementing date								
24. Size of hole or pipe plugged (in.)								
25. Depth to bottom of tubing or drill pipe (ft.)								
26. Sacks of cement used (each plug)								
27. Slurry volume pumped (cu. ft.)								
28. Calculated top of plug (ft.)								
29. Measured top of plug, if tagged (ft.)								
30. Slurry wt. (lbs/gal)								
31. Type cement								

CEMENTER'S CERTIFICATE: I declare under penalties prescribed in Sec. 91.143, Texas Natural Resources Code, that I am authorized to make this certification, that the cementing of casing and/or the placing of cement plugs in this well as shown in the report was performed by me or under my supervision, and that the cementing data and facts presented on both sides of this form are true, correct, and complete, to the best of my knowledge. This certification covers cementing data only.

Danny Jones - Cementer	Halliburton Energy	Danny Jones	
Name and title of cementer's representative	Cementing Company	Signature	
P.O. Box 688	Caldwell, Texas 77836	409/567-4674	July 23, 1993
Address	City, State, Zip Code	Tel.: Area Code Number	Date: mo. day yr.

OPERATOR'S CERTIFICATE: I declare under penalties prescribed in Sec. 91.143, Texas Natural Resources Code, that I am authorized to make this certification, that I have knowledge of the well data and information presented in this report, and that data and facts presented on both sides of this form are true, correct, and complete, to the best of my knowledge. This certification covers all well data.

PAUL LECOCKE	CONTROLLER	Paul Lec	
Typed or printed name of operator's representative	Title	Signature	
400 N ST PAUL #1040	DALLAS TX 75201	214-979-9010	9-8-93
Address	City, State, Zip Code	Tel.: Area Code Number	Date: mo. day yr.

Instructions to Form W-15, Cementing Report

IMPORTANT: Operators and cementing companies must comply with the requirements of the Commission's Statewide Rules 8 (Water Protection), 13 (Casing, Cementing, Drilling, and Completion), and 14 (Well Plugging). For offshore operations, see the requirements of Rule 13 (c).

A. **What to file.** An operator should file an original and one copy of the completed Form W-15 for each cementing company used on a well. The cementing of different casing strings on a well by one cementing company may be reported on one form. Form W-15 should be filed with the following:

- An initial oil or gas completion report, Form W-2 or G-1, as required by Statewide or special field rules;
- Form W-4, Application for Multiple Completion, if the well is a multiple parallel casing completion; and
- Form W-3, Plugging Record, unless the W-3 is signed by the cementing company representative. When reporting dry holes, operators must complete Form W-15, in addition to Form W-3, to show any casing cemented in the hole.

B. **Where to file.** The appropriate Commission District Office for the county in which the well is located.

C. **Surface casing.** An operator must set and cement sufficient surface casing to protect all usable-quality water strata, as defined by the Texas Department of Water Resources, Austin. Before drilling a well in any field or area in which no field rules are in effect or in which surface casing requirements are not specified in the applicable rules, an operator must obtain a letter from the Department of Water Resources stating the protection depth. Surface casing should not be set deeper than 200 feet below the specified depth without prior approval from the Commission.

D. **Centralizers.** Surface casing must be centralized at the shoe, above and below a stage collar or diverting tool, if run, and through usable-quality water zones. In nondeviated holes, a centralizer must be placed every fourth joint from the cement shoe to the ground surface or to the bottom of the cellar. All centralizers must meet API specifications.

E. **Exceptions and alternative casing programs.** The District Director may grant an exception to the requirements of Statewide Rule 13. In a written application, an operator must state the reason for the requested exception and outline an alternate program for casing and cementing through the protection depth for strata containing usable-quality water. The District Director may approve, modify, or reject a proposed program. An operator must obtain approval of any exception before beginning casing and cementing operations.

F. **Intermediate and production casing.** For specific technical requirements, operators should consult Statewide Rule 13 (b) (3) and (4).

G. **Plugging and abandoning.** Cement plugs must be placed in the wellbore as required by Statewide Rule 14. The District Director may require additional cement plugs. For onshore or inland wells, a 10-foot cement plug must be placed in the top of the well, and the casing must be cut off three feet below the ground surface. All cement plugs, except the top plug, must have sufficient slurry volume to fill 100 feet of hole, plus ten percent for each 1,000 feet of depth from the ground surface to the bottom of the plug.

To plug and abandon a well, operators must use only cementers approved by the Director of Field Operations. Cementing companies, service companies, or operators can qualify as approved cementers by demonstrating that they are able to mix and pump cement in compliance with Commission rules and regulations.

Cementer: Fill in shaded areas.
Operator: Fill in other items.

Form W-15
Cementing Report
Rev. 4/1/83
483-045

RAILROAD COMMISSION OF TEXAS
Oil and Gas Division

1. Operator's Name (As shown on Form P-5, Organization Report)	2. RRC Operator No.	3. RRC District No.	4. County of Well Site
DALE OPERATING COMPANY	197624	03	Brazos

5. Field Name (Wildcat or exactly as shown on RRC records)	6. API No.	7. Drilling Permit No.
GIDDINGS (AUSTIN CHALK, GAS)	42-041317 52	412947

8. Lease Name	9. Rule 37 Case No.	10. Oil Lease/Gas ID No.	11. Well No.
Barrera			2

CASING CEMENTING DATA:	SURFACE CASING	INTER-MEDIATE CASING	PRODUCTION CASING		MULTI-STAGE CEMENTING PROCESS	
			Single String	Multiple Parallel Strings	Tool	Shoe
12. Cementing Date		7-17-93				
13. •Drilled hole size		9-7/8				
•Est. % wash or hole enlargement		20 %				
14. Size of casing (in. O.D.)		7-5/8				
15. Top of liner (ft.)		—				
16. Setting depth (ft.)		11,059				
17. Number of centralizers used		24				
18. Hrs. waiting on cement before drill-out		—				
1st Slurry — 19. API cement used: No. of sacks ▶		1300				
1st Slurry — Class ▶		Premium				
1st Slurry — Additives ▶		.6% Halad-22A + 35% SSA-1 + .3% HR-4 + .5% CFR-2				
2nd Slurry — No. of sacks ▶						
2nd Slurry — Class ▶						
2nd Slurry — Additives ▶						
3rd Slurry — No. of sacks ▶						
3rd Slurry — Class ▶						
3rd Slurry — Additives ▶						
1st — 20. Slurry pumped: Volume (cu. ft.) ▶		1950				
1st — Height (ft.) ▶		8993.5				
2nd — Volume (cu. ft.) ▶						
2nd — Height (ft.) ▶						
3rd — Volume (cu. ft.) ▶						
3rd — Height (ft.) ▶						
Total — Volume (cu. ft.) ▶		1950				
Total — Height (ft.) ▶		8993.5				
21. Was cement circulated to ground surface (or bottom of cellar) outside casing?		No				

22. Remarks

OVER ▶

CEMENTING TO PLUG AND ABANDON	PLUG # 1	PLUG # 2	PLUG # 3	PLUG # 4	PLUG # 5	PLUG # 6	PLUG # 7	PLUG # 8
23. Cementing date								
24. Size of hole or pipe plugged (in.)								
25. Depth to bottom of tubing or drill pipe (ft.)								
26. Sacks of cement used (each plug)								
27. Slurry volume pumped (cu. ft.)								
28. Calculated top of plug (ft.)								
29. Measured top of plug, if tagged (ft.)								
30. Slurry wt. (lbs/gal)								
31. Type cement								

CEMENTER'S CERTIFICATE: I declare under penalties prescribed in Sec. 91.143, Texas Natural Resources Code, that I am authorized to make this certification, that the cementing of casing and/or the placing of cement plugs in this well as shown in the report was performed by me or under my supervision, and that the cementing data and facts presented on both sides of this form are true, correct, and complete, to the best of my knowledge. This certification covers cementing data only.

Douglas Sykes - Cementer — Name and title of cementer's representative
Halliburton Energy — Cementing Company
Doug Sykes — Signature

P.O. Box 688 — Address
Caldwell, Texas 77836 — City, State, Zip Code
409/567-4674 — Tel.: Area Code Number
July 22, 1993 — Date: mo. day yr.

OPERATOR'S CERTIFICATE: I declare under penalties prescribed in Sec. 91.143, Texas Natural Resources Code, that I am authorized to make this certification, that I have knowledge of the well data and information presented in this report, and that data and facts presented on both sides of this form are true, correct, and complete, to the best of my knowledge. This certification covers all well data.

PAUL LEGOCKE — Typed or printed name of operator's representative
CONTROLLER — Title
Paul Legocke — Signature

400 N. ST PAUL #1040 — Address
DALLAS TX 75201 — City, State, Zip Code
214-979-9010 — Tel.: Area Code Number
9-6-93 — Date: mo. day yr.

Instructions to Form W-15, Cementing Report

IMPORTANT: Operators and cementing companies must comply with the requirements of the Commission's Statewide Rules 8 (Water Protection), 13 (Casing, Cementing, Drilling, and Completion), and 14 (Well Plugging). For offshore operations, see the requirements of Rule 13 (c).

A. What to file. An operator should file an original and one copy of the completed Form W-15 for each cementing company used on a well. The cementing of different casing strings on a well by one cementing company may be reported on one form. Form W-15 should be filed with the following:

- An initial oil or gas completion report, Form W-2 or G-1, as required by Statewide or special field rules;
- Form W-4, Application for Multiple Completion, if the well is a multiple parallel casing completion; and
- Form W-3, Plugging Record, unless the W-3 is signed by the cementing company representative. When reporting dry holes, operators must complete Form W-15, in addition to Form W-3, to show any casing cemented in the hole.

B. Where to file. The appropriate Commission District Office for the county in which the well is located.

C. Surface casing. An operator must set and cement sufficient surface casing to protect all usable-quality water strata, as defined by the Texas Department of Water Resources, Austin. Before drilling a well in any field or area in which no field rules are in effect or in which surface casing requirements are not specified in the applicable rules, an operator must obtain a letter from the Department of Water Resources stating the protection depth. Surface casing should not be set deeper than 200 feet below the specified depth without prior approval from the Commission.

D. Centralizers. Surface casing must be centralized at the shoe, above and below a stage collar or diverting tool, if run, and through usable-quality water zones. In nondeviated holes, a centralizer must be placed every fourth joint from the cement shoe to the ground surface or to the bottom of the cellar. All centralizers must meet API specifications.

E. Exceptions and alternative casing programs. The District Director may grant an exception to the requirements of Statewide Rule 13. In a written application, an operator must state the reason for the requested exception and outline an alternate program for casing and cementing through the protection depth for strata containing usable-quality water. The District Director may approve, modify, or reject a proposed program. An operator must obtain approval of any exception before beginning casing and cementing operations.

F. Intermediate and production casing. For specific technical requirements, operators should consult Statewide Rule 13 (b) (3) and (4).

G. Plugging and abandoning. Cement plugs must be placed in the wellbore as required by Statewide Rule 14. The District Director may require additional cement plugs. For onshore or inland wells, a 10-foot cement plug must be placed in the top of the well, and the casing must be cut off three feet below the ground surface. All cement plugs, except the top plug, must have sufficient slurry volume to fill 100 feet of hole, plus ten percent for each 1,000 feet of depth from the ground surface to the bottom of the plug.

To plug and abandon a well, operators must use only cementers approved by the Director of Field Operations. Cementing companies, service companies, or operators can qualify as approved cementers by demonstrating that they are able to mix and pump cement in compliance with Commission rules and regulations.

DIRECTIONAL SURVEY, Inc.
CORPUS CHRISTI, Tx.

07/04/93
10:12 PM

OPERATOR: DALE OPERATING COMPANY
WELL: BARRERA # 2
LOCATION: BRAZOS COUNTY,TEXAS

JOB #: G-090CC-93
SURVEYOR: KEITH CANTRELL
RIG: GREYWOLF # 15

MINIMUM CURVATURE CALCULATIONS

PROPOSED DIRECTION: 330.00

SUR NUM	MD	INC	TRUE AZM	TVD	N-S	E-W	SECT	DLS/ 100	CLOSURE DISTANCE	CLOSURE DIRECTION
TIE-IN	0.00	0.00	0.00	0.00	0.00	0.00		0.00	0.00	
1	200.00	0.00	0.00	200.00	0.00 N	0.00 E	-0.00	0.00	0.00	63.43
2	400.00	0.25	161.00	400.00	0.41 S	0.14 E	-0.43	0.13	0.44	161.00
3	600.00	0.25	191.00	600.00	1.25 S	0.20 E	-1.19	0.06	1.27	170.90
4	800.00	0.50	221.00	799.99	2.34 S	0.45 W	-1.80	0.15	2.38	191.00
5	1000.00	0.25	235.00	999.99	3.25 S	1.38 W	-2.12	0.13	3.53	203.08
6	1200.00	0.25	314.00	1199.99	3.20 S	2.06 W	-1.74	0.16	3.80	212.75
7	1400.00	0.25	272.00	1399.99	2.88 S	2.81 W	-1.09	0.09	4.02	224.27
8	1600.00	0.50	205.00	1599.98	3.65 S	3.61 W	-1.36	0.23	5.14	224.66
9	1800.00	0.25	145.00	1799.98	4.80 S	3.73 W	-2.29	0.22	6.08	217.83
10	2000.00	0.50	275.00	1999.98	5.08 S	4.35 W	-2.23	0.34	6.69	220.54
11	2200.00	0.50	222.00	2199.97	5.66 S	5.80 W	-2.00	0.22	8.10	225.73
12	2400.00	0.25	297.00	2399.97	6.11 S	6.77 W	-1.90	0.25	9.12	227.97
13	2600.00	0.50	322.00	2599.96	5.22 S	7.70 W	-0.67	0.15	9.30	235.86
14	2800.00	0.25	81.00	2799.96	4.46 S	7.81 W	0.04	0.33	8.99	240.24
15	3000.00	0.50	306.00	2999.96	3.88 S	8.08 W	0.68	0.35	8.97	244.34
16	3200.00	0.50	322.00	3199.95	2.68 S	9.33 W	2.34	0.07	9.70	253.95
17	3400.00	0.50	325.00	3399.94	1.28 S	10.36 W	4.07	0.01	10.44	262.96
18	3600.00	0.25	342.00	3599.94	0.15 S	11.00 W	5.37	0.14	11.00	269.22
19	3800.00	0.50	21.00	3799.93	1.08 N	10.82 W	6.34	0.17	10.87	275.70
20	4000.00	0.50	345.00	3999.93	2.74 N	10.73 W	7.74	0.15	11.08	284.30
21	4200.00	0.50	56.00	4199.92	4.07 N	10.24 W	8.64	0.29	11.01	291.67
22	4400.00	0.25	356.00	4399.92	4.99 N	9.54 W	9.09	0.22	10.77	297.61
23	4600.00	0.50	318.00	4599.91	6.07 N	10.16 W	10.34	0.17	11.84	300.88

24	4800.00	0.25	31.00	4799.91	7.10 N	10.52 W	11.40	0.24	12.69	304.01
25	5000.00	0.50	284.00	4999.91	7.68 N	11.14 W	12.22	0.31	13.53	304.59
26	5200.00	0.50	11.00	5199.90	8.75 N	11.82 W	13.49	0.34	14.71	306.51
27	5400.00	0.50	284.00	5399.90	9.82 N	12.50 W	14.75	0.34	15.89	308.15
28	5600.00	0.25	240.00	5599.89	9.81 N	13.72 W	15.36	0.18	16.87	305.56
29	5800.00	0.50	77.00	5799.89	9.79 N	13.25 W	15.10	0.37	16.47	306.45
30	6000.00	0.25	290.00	5999.89	10.13 N	12.81 W	15.18	0.36	16.33	308.35
31	6200.00	0.25	346.00	6199.89	10.71 N	13.33 W	15.94	0.12	17.09	308.78
32	6400.00	0.50	15.00	6399.88	11.97 N	13.21 W	16.97	0.15	17.83	312.20
33	6600.00	0.25	101.00	6599.88	12.73 N	12.55 W	17.30	0.27	17.88	315.41
34	6800.00	0.50	304.00	6799.88	13.14 N	12.85 W	17.80	0.37	18.38	315.64
35	7000.00	0.25	260.00	6999.87	13.55 N	14.00 W	18.73	0.18	19.48	314.06
36	7200.00	0.50	12.00	7199.87	14.33 N	14.25 W	19.53	0.32	20.21	315.16
37	7400.00	0.50	280.00	7399.86	15.33 N	14.93 W	20.74	0.36	21.40	315.77
38	7600.00	0.50	285.00	7599.86	15.71 N	16.63 W	21.92	0.02	22.88	313.37
39	7800.00	0.50	275.00	7799.85	16.01 N	18.34 W	23.04	0.04	24.35	311.12
40	8000.00	0.50	40.00	7999.85	16.76 N	18.65 W	23.84	0.44	25.07	311.94
41	8200.00	0.25	88.00	8199.84	17.44 N	17.65 W	23.93	0.19	24.81	314.65
42	8400.00	0.50	314.00	8399.84	18.06 N	17.84 W	24.56	0.35	25.39	315.35
43	8600.00	1.00	339.00	8599.82	20.30 N	19.10 W	27.13	0.29	27.87	316.75
44	8800.00	1.50	335.00	8799.77	24.30 N	20.83 W	31.46	0.25	32.00	319.40
45	9000.00	1.50	327.00	8999.71	28.87 N	23.36 W	36.68	0.10	37.14	321.02
46	9200.00	1.75	325.00	9199.62	33.56 N	26.54 W	42.34	0.13	42.79	321.67
47	9400.00	2.00	323.00	9399.52	38.85 N	30.39 W	48.84	0.13	49.33	321.97
48	9600.00	2.25	317.00	9599.38	44.51 N	35.17 W	56.13	0.17	56.73	321.69
49	9800.00	2.50	311.00	9799.21	50.24 N	41.14 W	64.08	0.18	64.94	320.69
50	10000.00	2.50	311.00	9999.02	55.97 N	47.72 W	72.33	0.00	73.55	319.55
51	10200.00	2.50	317.00	10198.83	62.02 N	53.99 W	80.70	0.13	82.23	318.96
52	10400.00	2.00	352.00	10398.68	68.67 N	57.45 W	88.19	0.72	89.53	320.08
53	10600.00	1.25	25.00	10598.60	74.10 N	57.01 W	92.68	0.59	93.49	322.42
54	10800.00	2.00	30.00	10798.52	79.10 N	54.35 W	95.67	0.38	95.97	325.51
55	11023.00	2.00	35.00	11021.39	85.66 N	50.17 W	99.26	0.08	99.27	329.64

CLOSURE AT 11023 FEET EQUALS 99.27 FEET AT N 30.36 W

DEPTH OF USABLE-QUALITY GROUND WATER TO BE PROTECTED

PLEASE READ ALL INSTRUCTIONS

The information requested is essential in order for this agency to provide an appropriate response. Please allow for receipt of this form in our offices at least one week before your operation begins. Due to the volume of these requests, it is difficult for us to handle telephone inquiries, and such only serve to delay the processing of these forms. Complete, keep the bottom sheet (gold) for your files, and mail the top 3 sheets of the 4-sheet set of carbon-backed forms to the address below; one of them will be returned to you bearing our response and one will be sent to the appropriate district office of the Railroad Commission. For questions phone: 512/463-8003.

Surface Casing
Texas Water Commission
P.O. Box 13087
Austin, TX 78711-3087

Date 06/15/93 TWC File No.: SC- 1876

Do not write in this space

Paul Lecocke 214-979-9010
Name of person preparing this request & telephone no. w/AC

Dale Operating Company
Company (operator's name as on RRC form W-1)

400 N. St. Paul, Ste. 1040
Mailing Address

Dallas, TX 75201
City and State Zip Code

Fold

COUNTY Brazos Survey Name J.M. Barrera
Block No. _____ Township _____ Section or Survey No. _____ (or) Lot No. _____
Abstract No. A- 68 LEASE Name Barrera Well No. 2

A map showing all surrounding SURVEYS and your well site must accompany this request.

Distances, in feet, and directions measured at right angles from each of two intersecting Section or Survey lines (NOT LEASE LINES) 485 feet from East line and 1562 feet from South line

Distance (in miles) and direction from a nearby town in this County (name the town).
3 miles in a North direction from Millican, TX

THE ABOVE INFORMATION IN THIS BLOCK MUST BE COMPLETE AND CORRECT!!!

RRC Lease No. _____ RRC Dist. No. 03

TYPE OR PRINT IN INK

Elevation (if avail.) _____ Proposed Total Depth TVD 11,500' Geologic Fm. at T.D. Austin Chalk

Purpose of the Request: ☒ New Drill ☐ Re-entry ☐ Plug & Abd. ☐ Other (specify) _____

Is this an amended request? ☐ Yes ☒ No Give previous File No. for this well: SC- _____

Additional data (check if attached):

Log of same or nearby well _____ (The applicable type of well log of a nearby well that shows the aquifers.)

ALWAYS attach the electric log of any well that is to be reentered.

Additional remarks: Horizontal Wellbore

The TEXAS WATER COMMISSION'S recommendation for the protection of usable-quality ground water at the referenced location is as follows:

CO-BRAZOS,SUR-BARRERA J.,LSE-BARRERA,A-68,#1,4/450;THE ELECTRIC (TO 3000")

Fold

The interval from the land surface to a depth of 450 feet must be protected.

Please send THE ELECTRIC (TO 3000") log of this well when it is available.

DO NOT WRITE HERE FOR TWC USE ONLY

JUN 1993 RECEIVED RRC OF TEXAS OG HOUSTON, TX

Very truly yours,

Steven L. White

Steven L. White
Geologist, Surface Casing, TWC

Date June 17, 1993
typed by TWC

NOTE: The depth to which we recommend that usable-quality water strata should be protected is intended to apply only to the subject well and not for area-wide use. Approval of the well-completion methods for protection of this ground water falls under the jurisdiction of the Railroad Commission of Texas. This recommendation is intended for normal drilling, production, and plugging operations only and does not apply to salt water disposal operations into a nonproductive zone (RRC Form W-14).

TWC-0051 (Rev. 10-16-91)

▶ Return each W-1 with plat, applicable fee, and "W-1 Compliance Certificate" (W-1c). Make a check or money order payable to the State Treasurer of Texas.

▶ Address to:
Railroad Commission of Texas
Oil and Gas Division, Drilling Permits
P. O. Box 12967
Austin, Texas 78711-2967

RAILROAD COMMISSION OF TEXAS
Oil and Gas Division
Application for Permit to Drill, Deepen, Plug Back, or Re-Enter

▶ File a copy of W-1 and plat in RRC District Office ▶ Read Instructions on Back

Form W-1
Rev. 9/1/91

EFFECTIVE SEPT. 1, 1991, PERMIT APPLICATION FEE WILL VARY ACCORDING TO THE TOTAL DEPTH SHOWN IN ITEM NO. 9 BELOW.
0-2000' - 8100. 2001' - 4000' - 8125
4001' - 9000' - 8150 9001' or deeper - 8200

Purpose of filing (mark appropriate boxes):
[X] Drill [ ] Deepen (below casing) [ ] Deepen (within casing) [ ] Plug Back [ ] Re-Enter
[ ] Horizontal [ ] Directional Well [ ] Sidetrack [ ] Amended Permit (enter permit no. at right & explain fully in Remarks)

Enter here, if assigned: ▶ API No. 42- ▶ Permit No. ▶ Rule 37 Case No.

1. Operator's Name (exactly as shown on Form P-5, Organization Report): Dale Operating Company
3. RRC Operator No.: 197624
4. RRC District No.: 03
5. County of Well Site: Brazos

2. Address (including city and zip code):
400 N. St. Paul, Ste. 1040
Dallas, TX 75201

6. Lease Name (32 spaces maximum): Barrera
7. RRC Lease/ID No.:
8. Well No.: 2
9. Total Depth: TVD 11,500'

10. Location
• Section _____ Block _____ Survey J.M. Barrera Abstract No. A- 68
• This well is to be located 3 miles in a North direction from Millican, TX, which is the nearest town in the county of the well site.

11. Distance from proposed location to nearest lease or unit line 478 ft.
12. Number of contiguous acres in lease, pooled unit, or unitized tract 286.62 (OUTLINE ON PLAT.)

13. FIELD NAME (Exactly as shown on RRC proration schedule). List all established and wildcat zones of anticipated completion. Attach additional Form W-1's as needed to list these zones. One zone per line.	14. Completion depth	15. Spacing pattern (ft.)	16. Density pattern (acres)	17. Number of acres in drilling unit for this well. OUTLINE ON PLAT.	18. Is this acreage assigned to another well on this lease & in this reservoir? If so, explain in Remarks.	19. Distance from proposed location to nearest applied for, permitted or completed well this lease & reservoir (ft.)	20. Oil, gas, or other type well (Specify)	21. No. of applied for, permitted, or completed locations (including this one) on lease in this reservoir. OIL	GAS
Giddings (Austin Chalk-3)	11400'	467/1200'	160/80	286.62	No	N/A	OIL	1	-0-
Wildcat (Above 11,500')	Above 11500'	467/1200'	40	286.62	No	N/A	O,G	1	1

22. Perpendicular surface location from two nearest designated lines:
• Lease/Unit 485' FEL & 2290' FSL
• Survey/Section 1075' FEL & 1562' FSL

If a directional well, show also projected bottom-hole location:
• Lease/Unit 637' FEL & 814' FWL
• Survey/Section 1095' FNL & 4175' FWL

23. Is this a pooled unit?
Yes [X] ▶ (Attach Form P-12 and certified plat.) No [ ]

24. Is Item 17 less than Item 16 (substandard acreage for any field applied for)?
Yes [ ] ▶ (Attach Form W-1A) No [X]

25. Is this wellbore subject to Statewide Rule 36 (hydrogen sulfide area)? Yes [ ] No [X]
If subject to Rule 36, is Form H-9 filed? Yes [ ] No [ ] ▶ If not filed, explain in Remarks.

26. Do you have the right to develop the minerals under any right-of-way that crosses, or is contiguous to, this tract? Yes [X] No [ ]
If not, and if the well requires a Rule 37 or 38 exception, see Instructions for Rule 37.

Remarks
Penetration Point is the same as the Surface Location.

I certify that information stated in this application is true and complete, to the best of my knowledge.

Paul Lecocke DEM — Paul Lecocke Controller
Signature — Name and title of operator's representative

June 17, 1993 — 214-979-9010
Date: mo. day yr. — Tel.: Area Code Number

RRC USE ONLY

Form P – 12
(1/16/74)

RAILROAD COMMISSION OF TEXAS
OIL AND GAS DIVISION

CERTIFICATE OF POOLING AUTHORITY

I, Paul Lecocke, being of lawful age, being familiar with the matter, and having full knowledge of the facts set out, do state:

(1) That the acreage claimed for the purpose of establishing a pooled drilling or proration unit under applicable orders of the Railroad Commission of Texas, for the

NAME OF OPERATOR: Dale Operating Company

NAME OF POOLED UNIT: Barrera WELL NO. 2

FIELD: Giddings (Austin Chalk-3) Wildcat (Above 11,500'), Brazos COUNTY,

TEXAS, contains 286.62 acres; that with respect to such pooled unit, as it is hereafter described, parties now owning a mineral interest or mineral interests (including royalty interests, working interests, or other mineral interests) therein either (1) acquired such interest as they now have subject to the provisions of an instrument or instruments now in effect and which permit the pooling of said interests or (2) have, by virtue of the execution of an instrument or instruments the provisions of which are now in effect, pooled such of said interests as they now own therein, in such manner that all of such pooled unit shall be considered by the Commission as one base tract as if all rights with respect thereto has been acquired under a single contract.

(2) That the pooled unit described in the preceding paragraph is made up of and contains the hereafter described individual tracts of land no part of which is embraced within any other pooled unit in the same field and which, by virtue of the pooling agreements referred to in the preceding paragraph, are now contained within the pooled unit herein described.

(3) That where a non-pooled undivided interest exists in any of the individual tracts pooled, that certain non-pooled interest is noted in the margin of this instrument beside the tract description to identify the existence of the non-pooled interests in that tract:

(OVER)

REV. 6/89

R/ ROAD COMMISSION OF TEX
OIL & GAS DIVISION

PERMIT TO DRILL, DEEPEN, PLUG BACK, OR RE-ENTER
ON REGULAR OR ADMINISTRATIVE EXCEPTION LOCATION

ERMIT NUMBER 412947	DATE PERMIT ISSUED OR AMENDED 6/17/93	DISTRICT 03
PI NUMBER 42 041 31752	FORM W-1 RECEIVED 6/17/93	COUNTY BRAZOS
YPE OF OPERATION DRILL (HORIZONTAL)		ACRES 286.62
PERATOR 197624 DALE OPERATING COMPANY THE HARTFORD BLDG, STE 1040 400 N. ST. PAUL DALLAS TX 75201		NOTICE This permit and any allowable assigned may be revoked if payment for fee(s) submitted to the Commission is not honored. District Office Telephone No.: 713 460-0631
EASE NAME BARRERA		WELL NUMBER 2
OCATION 3.00 MILES N FROM MILLICAN		TOTAL DEPTH 11,500
ECTION, BLOCK and/or SURVEY SECTION => BLOCK => ABSTRACT => 68 SURVEY ==> J.M. BARRERA		
ISTANCE--LEASE LINES 485.00 F E - 2,290.00 F S		DISTANCE--NEAREST WELL ON LEASE N/A
ISTANCE--SURVEY LINES 1,075.00 F (CENTRAL) E - 1,562.00 F S		

READ IMPORTANT CONDITIONS AND INSTRUCTIONS ON THE BACK OF THIS FORM

IELD(S) AND LIMITATIONS

PERMIT BOTTOM HOLE LOCATION:
LEASE DISTANCE ==> 637.00 F E - 814.00 F W
SURVEY DISTANCE => 1,095.00 F N - 4,175.00 F W LYH
NEAREST WELL ====> N/A

WILDCAT
GIDDINGS (AUSTIN CHALK-3)

** LIMITATIONS **

THE FOLLOWING RESTRICTIONS APPLY TO ALL FIELDS

REGULAR PROVIDED THIS WELL IS NEVER COMPLETED IN VIOLATION OF APPLICABLE SPECIAL FIELD OR STATEWIDE SPACING RULES.
REGULAR PROVIDED THIS WELL IS NEVER DRILLED DEEPER THAN 11500 FEET.
WILDCAT ABOVE 11500 FEET.
PENETRATION POINT IS THE SAME AS THE SURFACE LOCATION.

Field: Lake Spring Co.
Lease: BARNETT
Well #: 2
AOF: 21796 MCF/DAY

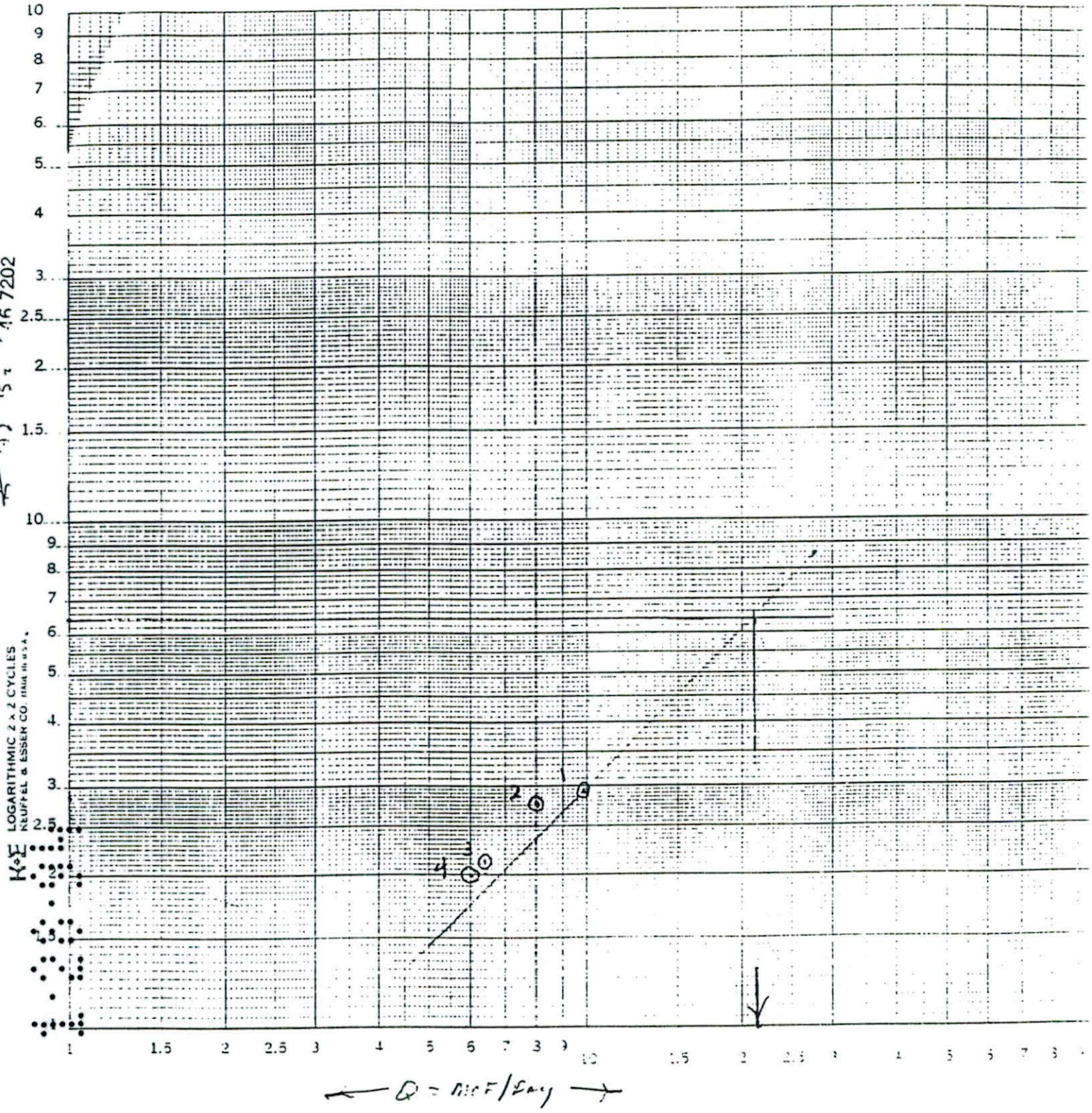

RAILROAD COMMISSION OF TEXAS
Oil and Gas Division

READ INSTRUCTIONS ON BACK

GAS WELL CLASSIFICATION REPORT

Form G-5
Rev. 01/01/86

1. OPERATOR NAME (Exactly as shown on Form P-5 Organization Report) Dale Operating Company	3. RRC DISTRICT NO. 03	4. OIL LEASE NO. OR GAS WELL ID NO.
2. MAILING ADDRESS Hartford Bldg., # 1040 Dallas, Texas 75201	5. WELL NO. 2	6. API NO. 42- 041 31752
	7. COUNTY OF WELL SITE Brazos	
8. FIELD NAME (as per RRC Records) GIDDINGS (AUSTIN CHALK, GAS)	9. LEASE NAME Barrera	
10. LOCATION (Section, Block, and Survey) J M BARRERA A-68	11. PIPELINE CONNECTION OR USE OF GAS AQUILA SOUTHWEST PIPELINE	

I. PRODUCTION TEST AT RATE ELECTED BY OPERATOR (data on 24-hour basis)

A. Date of Test 9/6/93

B. Gas Volume 5495 (Mcf)

C. Oil or Condensate Volume 924.0 (Bbl)

D. Water Volume 49.0 (Bbl)

E. Gas/Liquid Hydrocarbon Ratio 5947:1 (Cf/Bbl)

F. Flowing Tubing Pressure 3315 (psia)

G. Choke Size 18/64 (in.)

H. Casing Pressure 640 (psia)

I. Shut-in Wellhead Pressure--Tubing 3962 (psia)

J. Separator Operating Pressure 905 (psia)

K. Color of Stock Tank Liquid pale yellow

L. Gravity of Separator Liquid --- °API

M. Gravity of Stock Tank Liquid 50.4 °API

N. Specific Gravity of the Gas (Air = 1) 0.750

II. A.S.T.M. DISTILLATION OF LIQUID SAMPLE. Distillation test is required for gas wells ONLY if the producing gas-liquid hydrocarbon ratio is less than 100,000 CF/barrel.

Date Liquid Sample Obtained 9/6/93

Where Obtained: ☐ Separator ☒ Stock Tank

% Over	Temp. (deg. F)	% Over	Temp. (deg. F)
Initial Boiling Temp.	116	60	409
10	162	70	454
20	212	80	517
30	264	90	562
40	313	95	---
50	352	End Point	714

Total Recovery 91.0 percent

Residue 2.0 percent

Loss 7.0 percent

I declare under penalties prescribed in Sec. 91.143, Texas Natural Resources Code, that I am authorized to make this report, that this report was prepared by me or under my supervision and direction, and that data and facts stated therein are true, correct, and complete to the best of my knowledge.

GARDNER CONSULTANTS, INC.
Mark W. Gardner
NAME (Type or Print)

Mark W Gardner
SIGNATURE

President
TITLE

9/8/93
DATE

Mark W. Gardner
CONTACT PERSON

(318) 865-1449
PHONE NUMBER

RRC USE ONLY

RAILROAD COMMISSION OF TEXAS

Oil and Gas Division

Please Read Instructions

ELECTRIC LOG STATUS REPORT

FORM L-1

Rev. 12/88

INSTRUCTIONS

When to file the L-1

- with Forms G-1, W-2, and GT-1 for new and deepened gas, oil, and geothermal wells
- with Form W-3 for plugged dry holes
- when sending in a log which was held under a request for confidentiality and the period of confidentiality has not yet expired

When the L-1 is NOT required

- with Forms W-2, G-1, and GT-1 filed for injection wells, disposal wells, water supply wells, service wells, re-test wells, re-classifications, and plugbacks of oil, gas, and geothermal wells
- with Form W-3 for plugging of other than a dry hole

Where to file the L-1

- with the appropriate Commission district office

Filling out the L-1

- Section I and the signature section must be filled out for all wells
- complete only the appropriate part of Section II

Type of log required

- any wireline survey run for the purpose of obtaining lithology, porosity, or resistivity information
- no more than one such log is required but it must be of the subject well
- if such a log is NOT run on the subject well, do NOT substitute any other type of log; just select Section II, Part A below

SEE REVERSE SIDE

SECTION I. IDENTIFICATION

Operator Name: DALE OPERATING COMPANY	District No.: 03	Completion Date: 8-28-93
Field Name: GIDDINGS (AUSTIN CHALK, GAS)	Drilling Permit No.: 412947	
Lease Name: BARRERA	Lease/ID No.:	Well No.: 2
County: BRAZOS	API No. 42 - 041 31752	

SECTION II. LOG STATUS (complete either A. or B.)

[X] A. BASIC ELECTRIC LOG NOT RUN

[ ] B. BASIC ELECTRIC LOG RUN (select one)

- [ ] 1. Confidentiality requested.
- [ ] 2. Confidentiality already granted on basic electric log covering this interval (applicable to deepened wells only).
- [ ] 3. Basic electric log covering this interval already on file with Commission (applicable to deepened wells only).
- [ ] 4. Log attached to (select one)
  - [ ] (a) Form L-1 (this form). If the company/lease name on log is different from that shown in Section I, please enter name on log here: _____.
    Check here if attached log is being submitted after being held confidential [ ].
  - [ ] (b) Form P-7, Application for Discovery Allowable and New Field Designation.
  - [ ] (c) Form W-4, Application for Multiple Completion: lease or ID no.(s) _____, well no.(s) _____.

Paul Lecocke (signature)	Controller (title)	
PAUL LECOCKE (name (print))	(214) 979-9010 (phone)	9-12-93 (date)

For Railroad Commission use only

RAILROAD COMMISSION OF TEXAS
OIL AND GAS DIVISION
[PRINTED FORM]

[DISTRICT 03]

Operator DALE OPERATING COMPANY
Address 400 N. ST PAUL #1040
DALLAS, TX 75201

[ ] RETEST

Test Period

Due Date

FORM G-10
Rev. 11/1/83
GAS WELL STATUS REPORT

Page 1X1
Effective Date 1ST PRODUCTION

FIELD NAME LEASE NAME	RRC IDENT. NO. WELL NUMBER	DATE TESTED Mo/Day/Yr	PRODUCING WELLS — DAILY PRODUCING RATE — GAS	CONDENSATE	WATER GAS/COND.	PRESSURE PSIA#	POTENTIAL BHP	NON-PRODUCING WELLS — SHUT IN @ (Date Required)	EXCEPTION SWR 14B (Expiration Date)	INJECTION	SALT WATER DISPOSAL	PLUGGED & ABANDONED
GIDDINGS (AUSTIN CHALK, GAS)	–	9-8-93	11,215 MCF	1576. BBLS	125 BBLS	SIWH 3977	☐ 21,796 MCF/DAY					
BARRERA	2	▨	.691 Spec.Grav.	50.7 Grav. °API	7.12 MCF/Bbl	3600 Flowing	☐ PSIA	SIWH PSIA				
			MCF	BBLS	BBLS	SIWH	☐ MCF/DAY					
		▨	Spec.Grav.	Grav. °API	MCF/Bbl	Flowing	☐ PSIA	SIWH PSIA				
			MCF	BBLS	BBLS	SIWH	☐ MCF/DAY					
		▨	Spec.Grav.	Grav. °API	MCF/Bbl	Flowing	☐ PSIA	SIWH PSIA				
			MCF	BBLS	BBLS	SIWH	☐ MCF/DAY					
		▨	Spec.Grav.	Grav. °API	MCF/Bbl	Flowing	☐ PSIA	SIWH PSIA				
			MCF	BBLS	BBLS	SIWH	☐ MCF/DAY					
		▨	Spec.Grav.	Grav. °API	MCF/Bbl	Flowing	☐ PSIA	SIWH PSIA				
PURCHASER'S STATEMENT DATE ________ PURCHASER: ________			MCF	BBLS	BBLS	SIWH	☐ MCF/DAY					
SIGNATURE ________		▨	Spec.Grav.	Grav. °API	MCF/Bbl	Flowing	☐ PSIA	SIWH PSIA				
AS PURCHASER'S REPRESENTATIVE, I AGREE THAT EACH TEST VOLUME SHOWN ABOVE IS A TRUE TEST REPRESENTATIVE OF EACH WELL(S) CAPABILITY.			MCF	BBLS	BBLS	SIWH	☐ MCF/DAY					
		▨	Spec.Grav.	Grav. °API	MCF/Bbl	Flowing	☐ PSIA	SIWH PSIA				

* COMMINGLING TEST REQUIREMENT (Gas Specific Gravity, Condensate Gravity and Gas Condensate Ratio Required)

X ADDITIONAL SPECIAL TEST REQUIREMENT

@ Wells with an exception to SWR 14 (B) (2) must insert the date (MO/Yr) the well was last produced or utilized.

Shut-in well head pressures are to be reported in pounds per square inch gauge pressure (PSIG) for wells in the West Panhandle, West Panhandle (Red Cave), and Texas-Hugoton Fields.

CERTIFICATE

I declare under penalties prescribed in Article 6036c, R.C.S., that I am authorized to make this report, that this report was prepared by me or under my supervision and direction, and that data and facts stated therein are true, correct, and complete, to the best of my knowledge.

Signature
Date 9-12-93

Title CONTROLLER
Telephone 214-979-9010

REVISED: 8 - 18 - 93
REVISED: 8 - 10 - 93
REVISED: 8 - 4 - 93

I CERTIFY THIS PLAT IS TRUE & CORRECT TO THE BEST OF MY KNOWLEDGE

PAUL LECOCKE
CONTROLLER

N

PENETRATION POINT is the same as the SURFACE LOCATION.

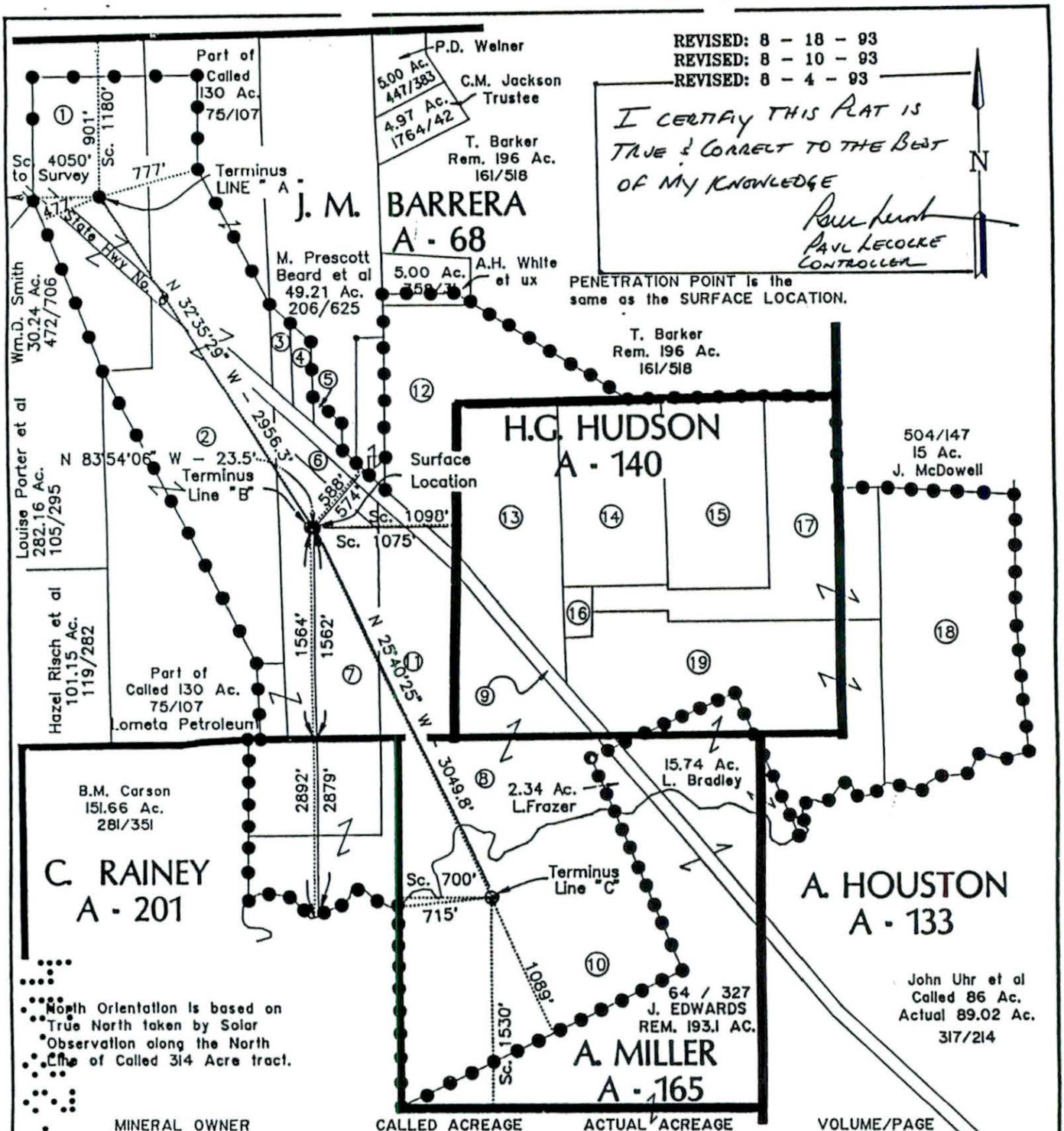

North Orientation is based on True North taken by Solar Observation along the North Line of Called 314 Acre tract.

	MINERAL OWNER	CALLED ACREAGE	ACTUAL ACREAGE	VOLUME/PAGE
1	Louise Porter, et al	Part of 314.0 out of 344.0	34.26	105/295
2	Dale Resources	Part of 130.0	65.59	75/107
3	1st American Bank	3.00	2.15	1163/701
4	N.M. Greer et ux	3.00	2.14	304/159
5	Frank Thurman,Jr.et al	1.037	0.97	1057/348 & 994/350
6	W. D. Fitch	2.741	2.61	1010/519
7	Emilio Ayche et al	Part of 60.0	35.47	1163/647
8	Lawrence Fraser	16.71 & Part of 80.31	72.49	856/629 & 959/388
9	STATE OF TEXAS	Part of 47.36 & Res.17.0	13.96	1773/15 & 81/242
10	Jane Edwards	Part of 193.1	66.70	64/327
11	J.B. Daugherty et al	17.0	21.96	151/397 Ref.30/428
12	Est.of Mills P. Walker & D.Mike	5.64 & Part of 196.0	33.62	161/518 Ref.29/525 & 30/432
13	Robert Becker et al	28.10	28.64	292/552
14	Robert Becker et al	25.0	24.88	193/423
15	Robert Becker et al	25.0	24.97	740/765
16	Gus Bradley, Jr. et al	1.81	1.82	452/897
17	Lawrence Bradley et al	33.076	33.076	1329/191
18	Tom Barker et al	55.0	49.88	161/518
19	J.D. Langley et ux	Part of 66.152	52.724	1329/191 Ref.1461/276

TOTAL 567.91 ACRES

I, H. CURTIS STRONG, REGISTERED PROFESSIONAL LAND SURVEYOR NO. 4961, DO HEREBY CERTIFY THAT THE WELL LOCATION AS SHOWN WAS STAKED ON THE GROUND AND IS TRUE AND CORRECT TO THE BEST OF MY KNOWLEDGE.

H. Curtis Strong

H. CURTIS STRONG, REGISTERED PROFESSIONAL LAND SURVEYOR

STATE OF TEXAS
REGISTERED
HORACE CURTIS STRONG
4961
PROFESSIONAL
LAND SURVEYOR

DALE OPERATING COMPANY

BARRERA NO. 2

H.G. HUDSON, J.M. BARRERA, A. MILLER, c. RAINEY, & A. HOUSTON SURVEYS
BRAZOS COUNTY, TEXAS

Scale: 1" = 1000' May 11, 1993

PREPARED BY: Garrett Engineering
Bryan , Tx. 77802 Ph. (409) 846 - 2688

File No. MF095380

Well Reports

Date Filed: 9/19/06

Deputy Clerk: Sally Rogers

By

DO NOT DESTROY

UNIT AGREEMENT MEMO
Unit No. 2918

Operator Dale Resources
Unit Name Barrera #2 Unit
County Brazos
Effective Date 8-11-93
Unitized for: Oil ___ Gas ___ Oil & Gas ✓

1. M.F. No. 095380
Area HROW Tr. 1
Sec. ___ Blk. ___ Survey _____
3.00/567.91 x 3/16 __.____%
.024581 .1875 .004608

2. M.F. No. 095228
Area _____ Tr. 2
Sec. ___ Blk. ___ Survey _____
10.96/567.91 x 1/5 __.____%

3. M.F. No. _____
Area _____ Tr. _____
Sec. ___ Blk. ___ Survey _____
_____ x _____ __.____%

4. M.F. No. _____
Area _____ Tr. _____
Sec. ___ Blk. ___ Survey _____
_____ x _____ __.____%

REMARKS:

Prepared by: EHM	Date 10-3-00
Map & GIS updated by:	Date
Keyed into database by: M. Silva	Date 10-24-00

GLO-36-11-97

Seneca Resources Corporation
a National Fuel Gas System company

January 24, 1994

General Land Office
State of Texas
Stephen F. Austin Building
1700 North Congress Avenue
Austin, TX 78701

Attn: Mr. Drew Reid

Re: State Oil & Gas Lease M-95380
Highway Right-of-Way Tract
N. E. Millican Prospect
Brazos County, Texas
Barrera No. 2 Unit

Gentlemen:

In connection with the captioned lease, enclosed is certain well information for the Barrera No. 2 Unit well. Also enclosed is a copy of the Pooling Agreement and Unit Designation dated August 11, 1993 for the subject unit. Dale Resources, Inc. is the operator of this unit and all of the subject lease (3.00 acres) has been committed to it.

If you should have any questions regarding the enclosure, please let us know.

Very truly yours,

John S. Cron

John S. Cron
Land Consultant

JSC/jt

Enclosure

I:\JC\056

333 CLAY STREET/SUITE 4150/HOUSTON, TEXAS 77002/(713) 658-0191

POOLING AGREEMENT

AND

UNIT DESIGNATION

DALE RESOURCES, INC.

Barrera #2 Unit

STATE OF TEXAS:

COUNTY OF BRAZOS: KNOW ALL MEN BY THESE PRESENTS:

That the undersigned, are the owners of the interests of the Lessee and Lessor in and to those valid and subsisting oil, gas and mineral leases listed on Exhibit "A", attached hereto including all amendments and corrections thereto. The undersigned desire to form a pooled unit for the production of oil and gas from the Austin Chalk formation. Now therefore, in consideration of the mutual covenants and agreements herein contained the undersigned parties hereby agree and declare as follows:

1. The undersigned parties do hereby pool, combine and unitize the oil, gas and mineral leases listed on Exhibit "A" attached hereto to form a pooled unit for the production of oil and gas in and under the lands described on the attached Exhibit "B", which lands are hereinafter referred to as "Unit Acreage". The Unit Acreage shall include without limitation all working interests, overriding royalty interests, production payments and other mineral interests pertaining to the production of oil and gas, insofar and only insofar as the leases and the interests incident thereto cover and include that certain correlative geological interval known as the Austin Chalk formation (hereinafter called "Pooled Interval") which occurs from 11,350 feet to 11,600 feet as correlated on that certain Electric Log from the CRL #1 M.P. Walker well located in the A. Houston Survey, A-133, Brazos County, Texas. The pooled unit shall be known as the Dale Resources, Inc. Barrera # 2 Unit (hereinafter referred to as "Unit"), containing a total Unit Acreage of 567.91 acres, more or less, as described on Exhibit "B" and shown by Exhibit "C".

2. The production of oil or gas from the Pooled Interval from a well on any part of the Unit Acreage shall constitute production from all of the leases contained in such Unit. Drilling or reworking operations or other operations conducted on any portion of the Unit Acreage for the production of oil or gas from the Pooled Interval shall constitute such operations for the production of oil or gas on all lands and leases included within the Unit.

3. All oil or gas produced from the Pooled Interval from any well in such Unit shall be allocated proportionately among all the tracts within such Unit in the proportion that the number of surface acres in each of such tracts which are included in the Unit bears to the total number of surface acres in such Unit, and the share of production to which each interest owner is entitled shall be computed on the basis of such owner's respective interest in each tract within the Unit.

5. This Unit shall be created upon the filing of this Pooling Agreement for record in Brazos County, Texas by Dale Resources, Inc. and if this Pooling Agreement is filed for record the Unit shall be effective as of the date of the first production. In the event that any of the owners of interest within the Unit Acreage shall fail or refuse to sign this Pooling Agreement, Dale Resources, Inc. shall not be required, but shall have sole option, to create the Unit by filing this Pooling Agreement for record. The failure or refusal of any interest owner to sign this agreement shall not render ineffective the Agreement of the interest owners who have signed this Pooling Agreement.

6. This Pooling Agreement shall not limit or restrict the rights of the Lessee to form pooled units contained in the leases on the attached Exhibit "A". The pooled Unit formed by this Pooling Agreement may be amended, expanded, reduced, reformed, changed in configuration, or dissolved in any manner and at any time and from time to time, at the election of Dale Resources, Inc. when in its sole judgment deems it necessary to properly explore or develop the lands covered and in the immediate vicinity of the Unit, provided, that the pooled Unit may not be expanded in excess of 640 acres plus 10 % tolerance.

7. This Pooling Agreement may be executed in counterparts and, if so executed, shall be valid, binding and have the same effect as if all the parties hereto actually joined in and executed one and the same document. In the event counterparts of this Pooling Agreement are executed, and for recording purposes, Dale Resources, Inc. is authorized to remove the signatory pages together with the appropriate acknowledgment pages from the individual counterparts, combine them with the other pages of this Pooling Agreement and with the other signatory and acknowledgment pages so as to form what shall be deemed and treated as a single original instrument showing execution by all parties hereto.

8. This Pooling Agreement is binding upon the parties hereto, their heirs, successors and assigns.

Executed this 11th day of August, 1993.

DALE RESOURCES, INC.

By: _____
Lynn Elliott
Executive Vice President

SENECA RESOURCES CORPORATION

By: _____
William M. Petmecky
General Manager, Land and Legal

CCM

STATE OF TEXAS
COUNTY OF BRAZOS

This instrument was acknowledge before me, Novella Krannig, on this the 11th day of August, 1993 by Lynn Elliott, Executive Vice President of Dale Resources, Inc., a Texas corporation on behalf of said corporation.

NOVELLA KRANNIG
MY COMMISSION EXPIRES
December 4, 1996

_____
Notary Public, State of Texas

R. S. Shawell

R. S. Shawell

STATE OF TEXAS

COUNTY OF HARRIS

This instrument was acknowledged before me on this 12th day of August, 1993, by R.S. Shawell.

Gwen A. Cook

Notary Public, State of Texas

GWEN A. COOK
PUBLIC, STATE OF TEXAS
MMISSION EXPIRES
. 18, 1993

GWEN A. COOK
NOTARY PUBLIC, STATE OF TEXAS
MY COMMISSION EXPIRES
OCT. 18, 1993

H. L. HAWKINS, JR.

By: J. T. Bond,
General Manager

For: H. L. Hawkins, Jr.

STATE OF TEXAS
County OF HARRIS

This instrument was acknowledged before me this 13th day of August, 1993, by J. T. Bond.

RONALD G. KENNEDY
NOTARY PUBLIC, STATE OF TEXAS
MY COMMISSION EXPIRES
MARCH 1, 1997

Notary Public, State of

SANCHEZ-O'BRIEN OIL & GAS
CORPORATION

By: John T. Brim
Name: JOHN T. BRIM
Title: VICE PRESIDENT LAND

STATE OF TEXAS

COUNTY OF WEBB

This instrument was acknowledged before me on this 9th day of September, 1993, by JOHN T. BRIM, as VICE PRES. LAND of Sanchez-O'Brien Oil & Gas Corporation, a DELAWARE corporation, on behalf of said corporation.

Olivia B. Cantu
Notary Public, State of Texas

EXHIBIT "A"

BARRERA #2 DESCRIPTION OF LEASES

1.	LESSOR:	Louise Weddington Porter
	LESSEE:	Lometa Petroleum Corporation
	LEASE DATE:	7-18-92
	RECORDING:	Volume 105, Page 295
	DESCRIPTION:	Part of 314.0 out of 344.0 acres of land, more or less, located in the J.M. Barrera Survey, A-68
2.	LESSOR:	Ruth Weddington Peattie
	LESSEE:	Lometa Petroleum Corporation
	LEASE DATE:	7-18-92
	RECORDING:	Volume 1557, Page 209
	DESCRIPTION:	344.00 acres of land, more or less, located in the J.M. Barrera Survey, A-68
3.	LESSOR:	Betty Jean Greer
	LESSEE:	Lometa Petroleum Corporation
	LEASE DATE:	7-18-92
	RECORDING:	Volume 1571, Page 41
	DESCRIPTION:	344.00 acres of land, more or less, located in the J.M. Barrera Survey, A-68
4.	LESSOR:	James Edward Greer, Jr.
	LESSEE:	Lometa Petroleum Corporation
	LEASE DATE:	7-18-92
	RECORDING:	Volume 1571, Page 45
	DESCRIPTION:	344.00 acres of land, more or less, located in the J.M. Barrera Survey, A-68
5.	LESSOR:	John Weddington Greer
	LESSEE:	Lometa Petroleum Corporation
	LEASE DATE:	7-18-92
	RECORDING:	Volume 1571, Page 49
	DESCRIPTION:	344.00 acres of land, more or less, located in the J.M. Barrera Survey, A-68
7.	LESSOR:	State of Texas, Commissioner of the General Land Office
	LESSEE:	Lometa Petroleum Corporation
	LEASE DATE:	4-4-93
	RECORDING:	Brazos County Clerk File #518481, Volume 1773, Page 15; General Land Office File #M-95228
	DESCRIPTION:	47.36 acres of land, more or less, located in the J.M. Barrera Survey, A-68; the H.G. Hudson Survey, A-140; the Andrew Miller Survey, A-165; and the A.D. Houston Survey, A-133
8.	ASSIGNOR:	Texaco Exploration and Production, Inc.
	ASSIGNEE:	Lometa Petroleum Corporation
	ASSIGN DATE:	12-28-92
	RECORDING:	Volume 1685, Page 155
	DESCRIPTION:	130.00 acres of land, more or less, located in the J.M. Barrera Survey, A-68
9a.	LESSOR:	David Ewing Prescott
	LESSEE:	Lometa Petroleum Corporation
	LEASE DATE:	1-21-93
	RECORDING:	Volume 1716, Page 245
	DESCRIPTION:	49.50 acres of land, more or less, located in the J.M. Barrera Survey, A-68
9b.	LESSOR:	Mildred Prescott Beard
	LESSEE:	Lometa Petroleum Corporation
	LEASE DATE:	1-21-93
	RECORDING:	Volume 1710, Page 218
	DESCRIPTION:	49.50 acres of land, more or less, located in the J.M. Barrera Survey, A-68
9c.	LESSOR:	Diane Elaine Prescott Cassel
	LESSEE:	Lometa Petroleum Corporation
	LEASE DATE:	1-21-93
	RECORDING:	Volume 1710, Page 223
	DESCRIPTION:	49.50 acres of land, more or less, located in the J.M. Barrera Survey, A-68

9e.	LESSOR:	Daniel Lee Prescott
	LESSEE:	Lometa Petroleum Corporation
	LEASE DATE:	1-21-93
	RECORDING:	Volume 1705, Page 222
	DESCRIPTION:	49.50 acres of land, more or less, located in the J.M. Barrera Survey, A-68
10a.	LESSOR:	Eliborio T. Perez and wife, Elena Perez
	LESSEE:	Lometa Petroleum Corporation
	LEASE DATE:	2-2-93
	RECORDING:	Volume 1727, Page 211
	DESCRIPTION:	5.00 acres of land, more or less, located in the J.M. Barrera Survey, A-68
10b.	LESSOR:	F.L. Pool
	LESSEE:	Lometa Petroleum Corporation
	LEASE DATE:	3-8-93
	RECORDING:	Volume 1764, Page 140
	DESCRIPTION:	1.00 acres of land, more or less, located in the J.M. Barrera Survey, A-68
11&12.	LESSOR:	Lawrence G. Fraser and wife, Barbara R. Fraser, etal.
	LESSEE:	Lometa Petroleum Corporation
	LEASE DATE:	1-25-93
	RECORDING:	Volume 1716, Page 240
	DESCRIPTION:	97.02 acres of land, more or less, lcoated in the H.G. Hudson Survey, A-140; in the Andrew Miller Survey, A-165; and in the Clement Rainey Survey, A-201
9-12a.	LESSOR:	Virginia Ryman Larsson, Trustee for the Virginia Ryman Larsson Trust
	LESSEE:	Lometa Petroleum Corporation
	LEASE DATE:	1-19-93
	RECORDING:	Volume 1704, Page 112
	DESCRIPTION:	150.00 acres of land, more or less, located in the J.M. Barrera Survey, A-68; in the Clement Rainey Survey, A-201; and in the Andrew Miller Survey, A-165
9-12b.	LESSOR:	Julia Ryman Holmes
	LESSEE:	Lometa Petroleum Corporation
	LEASE DATE:	1-19-93
	RECORDING:	Volume 1705, Page 225
	DESCRIPTION:	150.00 acres of land, more or less, located in the J.M. Barrera Survey, A-68; in the Clement Rainey Survey, A-201; and in the Andrew Miller Survey, A-165
9-12c.	LESSOR:	Eldridge Dickinson Ryman
	LESSEE:	Lometa Petroleum Corporation
	LEASE DATE:	1-19-93
	RECORDING:	Volume 1720, Page 55
	DESCRIPTION:	150.00 acres of land, more or less, located in the J.M. Barrera Survey, A-68; in the Clement Rainey Survey, A-201; and in the Andrew Miller Survey, A-165
9-12d.	LESSOR:	Barbara Ryman Degnan & James Degnan, Co Trustees
	LESSEE:	Lometa Petroleum Corporation
	LEASE DATE:	1-19-93
	RECORDING:	Volume 1724, Page 330
	DESCRIPTION:	150.00 acres of land, more or less, located in the J.M. Barrera Survey, A-68; in the Clement Rainey Survey, A-201; and in the Andrew Miller Survey, A-165
13.	LESSOR:	Frank Thurman, Jr. and Bettie Thurman
	LESSEE:	Lometa Petroleum Corporation
	LEASE DATE:	2-26-93
	RECORDING:	Volume 1057, Page 348
	DESCRIPTION:	0.303 acres of land, more or less, located in the J. M. Barrera Survey, A-68
14.	LESSOR:	N.M. Greer and Mattie M. Greer
	LESSEE:	Lometa Petroleum Corporation
	LEASE DATE:	2-2-93
	RECORDING:	Volume 159, Page 304
	DESCRIPTION:	3.0 acres, more or less, being located in the J.M. Barrera Survey, A-68.
15.	LESSOR:	First American Bank
		Ivan Olson, Vice President

	DESCRIPTION:	40.54 acres, more or less, being located in the J.M. Barrera Survey, A-68
17.	LESSOR:	William T. Fleming, Jr. and Kathryn Fleming
	LESSEE:	Lometa Petroleum Corporation
	LEASE DATE:	1-28-93
	RECORDING:	Volume 736, Page 728
	DESCRIPTION:	160.0 acres, more or less, being located in the J.M. Barrera Survey, A-68
18.	LESSOR:	Arthur J. Edwards, etal.
	LESSEE:	Lometa Petroleum Corporation
	LEASE DATE:	9-30-92
	RECORDING:	Volume 1656, Page 107
	DESCRIPTION:	Part of 193.1 acres, more or less, being located in the J.M. Barrera Survey, A-68
19.	LESSOR:	W.G. Sims
	LESSEE:	Lometa Petroleum Corporation
	LEASE DATE:	3-10-92
	RECORDING:	Volume 226, Page 107
	DESCRIPTION:	20.4 acres gross, 10.2 acres net, more or less, being located in the J.M. Barrera Survey, A-68
20.	LESSOR:	William D. Fitch
	LESSEE:	Lometa Petroleum Corporation
	LEASE DATE:	6/11/93
	RECORDING:	Volume 1819, Page 240
	DESCRIPTION:	2.741 acres, more or less, being located in the J.M. Barrera Survey, A-68
21.	LESSOR:	A.D. Dawson
	LESSEE:	Lometa Petroleum Corporation
	LEASE DATE:	
	RECORDING:	Volume 994, Page 350
	DESCRIPTION:	0.734 acres, more or less, being located in the J.M. Barrera Survey, A-68
22.	LESSOR:	Dale Resources, Inc.
	LESSEE:	Dale Operating
	LEASE DATE:	August 11, 1993
	RECORDING:	Volume _____, Page _____
	DESCRIPTION:	Part of 130.0 acres, more or less, being located in the J.M. Barrera Survey, A-68
23.	LESSOR:	Mills P. Walker
	LESSEE:	R.L. Reese
	LEASE DATE:	December 26, 1977
	RECORDING:	Volume 29, Page 525
	DESCRIPTION:	1558 acres, more or less, out of the S.W. Robertson, Andrew Houston, A-133, J. Barrera, A-68, Surveys, Brazos County, Texas.
24.	LESSOR:	John B. Dougherty and Lucille Dougherty
	LESSEE:	Wm.C. Richardson
	LEASE DATE:	February 15, 1978
	RECORDING:	Volume 30, Page 428
	DESCRIPTION:	1826 acres, more or less, out of the S.W. Robertson, A-202, Andrew Houston, A-133, J. Barrera, A-68, J. Gray, A-250, Surveys, Brazos County, Texas.
25.	LESSOR:	John M. Lawrence, III Trustee
	LESSEE:	Wm.C. Richardson
	LEASE DATE:	February 15, 1978
	RECORDING:	Volume 30, Page 432
	DESCRIPTION:	1809 acres, more or less, out of the S.W. Robertson, 202, Andrew Houston, A-133, J. Barrera, A-68, James Gray, A-250, Surveys, Brazos County, Texas.

All of the above Oil, Gas and Mineral Leases were recorded in Brazos County, Texas.

EXHIBIT "B"

FIELD NOTES
DALE RESOURCES, INC.
BARRERA NO. 2 WELL UNIT
BRAZOS COUNTY, TEXAS
AUGUST 9, 1993

All that certain lot, tract or parcel of land being 567.91 acres and being called the DALE RESOURCES, INC. - BARRERA NO. 2 WELL UNIT situated in the J. M. BARRERA SURVEY, Abstract No. 68, H. G. HUDSON SURVEY, Abstract No. 140, C. RAINEY SURVEY, Abstract No. 201, A. MILLER SURVEY, Abstract No. 165, and the A. HOUSTON SURVEY, Abstract No. 133, Brazos County, Texas, said 567.91 acre unit being all or a part of the following described tracts;

1. Being the Louise Porter et al 34.26 Mineral acre tract, same being a part of that certain Called 314 acre tract out of a 344 acre tract as described in Volume 105, Page 295;
2. Being the Dale Resources 65.59 Mineral acre tract, same being a part of that certain Called 130.00 acre tract as described in Volume 75, Page 107;
3. Being the First American Bank of Bryan 2.15 Mineral acre tract, same being all of that certain Called 3.00 acre tract as described in Volume 1163, Page 701;
4. Being the N. M. Greer et ux 2.14 Mineral acre tract, same being all of that certain Called 3.00 acre tract as described in Volume 304, Page 159;
5. Being the Frank Thurman, Jr. et al 0.97 Mineral acre tract, same being all of that certain Called 0.303 acre tract and that certain Called 0.734 acre tract as described in Volume 1057, Page 348 and Volume 994, Page 350, respectively;
6. Being the W. D. Fitch 2.61 Mineral acre tract, same being all of that certain Called 2.741 acre tract as described in Volume 1010, Page 519;
7. Being the Emilio Ayche et al 35.47 Mineral acre tract, same being a part of that certain Called 60.00 acre tract as described in Volume 1163, Page 647;
8. Being the Lawrence Fraser 72.49 Mineral acre tract, same being all of that certain Called 16.71 acre tract and a part of that certain Called 80.31 acre tract as described in Volume 856, Page 629, and Volume 959, Page 388, respectively;
9. Being the STATE OF TEXAS 13.96 Mineral acre tract, same being a part of that certain Called 47.36 acre tract and all of that certain State right-of-way tract out of 17 acres as described in Volume 1773, Page 15 and Volume 81, Page 242, respectively;
10. Being the Jane Edwards 66.70 Mineral acre tract, same being a part of that certain Called 193.10 acre tract as described in Volume 64, Page 327;
11. Being the J. B. Daugherty et al 21.96 Mineral acre tract, same being all of that certain Called 17.0 acre tract as described in Volume 151, Page 397;
12. Being the Mills P. Walker Estate and D. Mike 33.62 Mineral acre tract, same being a part of that certain Called 1541 acre tract as described in Volume 29, Page 525;
13. Being the Robert Becker et al 28.64 Mineral acre tract, same being all of that certain Called 28.10 acre tract as described in Volume 292, Page 552;

14. Being the Robert Becker et al 24.88 Mineral acre tract, same being all of that certain Called 25.0 acre tract as described in Volume 193, Page 423;
15. Being the Robert Becker et al 24.97 Mineral acre tract, same being all of that certain Called 25.0 acre tract as described in Volume 740, Page 765;
16. Being the Gus Bradley, Jr. et ux 1.82 Mineral acre tract, same being all of that certain Called 1.81 acre tract as described in Volume 452, Page 897;
17. Being the Gus Bradley, Jr. et ux 33.076 Mineral acre tract, same being all of that certain Called 33.076 acre tract as described in Volume 1329, Page 191;
18. Being the Tom Barker et al 49.88 Mineral acre tract, same being all of that certain Called 55.0 acre tract as described in Volume 161, Page 518;
19. Being the J. D. Langley et ux 52.724 Mineral acre tract, same being a part of that certain Called 66.152 acre tract as described in Volume 1329, Page 191;

all being Deed or Official Records of Brazos County, Texas, said 567.91 acre unit being more particularly described by metes and bounds as follows;

BEGINNING at a railroad spike found in the centerline of PEACH CREEK ROAD for the most easterly northeast corner, same being the northeast corner of said Tom Barker Called 55 acre tract;

THENCE along the centerline of said PEACH CREEK ROAD and the east line of said Called 55 acre tract the following calls;

S 0°03'54" W a distance of 810.07 feet; and,

S 4°42'26" E a distance of 1091.20 feet to a point at the intersection of PEACH CREEK and the centerline of PEACH CREEK ROAD for the southeast corner, same being the southeast corner of said Called 55 acre tract;

THENCE along the south line of said Called 55 acre tract and said 66.152 acre tract with the centerline of said PEACH CREEK the following calls;

S 72°44'37" W a distance of 11.41 feet;
S 62°27'41" W a distance of 37.10 feet;
S 82°12'08" W a distance of 36.32 feet;
S 72°47'12" W a distance of 38.82 feet;
S 70°09'35" W a distance of 48.52 feet;
S 85°23'15" W a distance of 43.47 feet;
N 72°46'59" W a distance of 137.86 feet;
S 84°35'43" W a distance of 39.56 feet;
S 41°34'58" W a distance of 30.20 feet;
S 17°52'34" W a distance of 48.59 feet;
S 27°46'05" W a distance of 48.14 feet;
S 46°47'45" W a distance of 57.06 feet;
S 85°49'02" W a distance of 210.16 feet;
S 57°31'47" W a distance of 93.31 feet;
S 35°45'57" W a distance of 67.59 feet;
S 87°54'51" W a distance of 39.31 feet;
N 71°57'05" W a distance of 173.54 feet;
N 85°37'09" W a distance of 68.73 feet;
S 53°21'16" W a distance of 157.55 feet;
S 84°49'34" W a distance of 98.97 feet;
N 22°43'10" W a distance of 95.35 feet;

N 36°09'26" W a distance of 37.05 feet;
N 86°56'34" W a distance of 39.13 feet;
S 38°05'01" W a distance of 149.09 feet;
S 29°46'47" W a distance of 48.75 feet;
S 78°39'56" W a distance of 39.26 feet;
N 70°02'44" W a distance of 72.29 feet;
N 89°06'11" W a distance of 40.04 feet;
S 49°28'43" W a distance of 36.18 feet;
S 24°12'10" W a distance of 64.39 feet;
S 8°10'43" E a distance of 117.90 feet;
S 47°43'49" E a distance of 36.00 feet;
S 27°06'42" W a distance of 44.30 feet ; and
S 84°38'16" W a distance of 46.66 feet to a point for an exterior corner;

THENCE N 23°38'48" W a distance of 1174.33 feet to a point for an interior corner;

THENCE S 66°21'12" W a distance of 1200.00 feet to a point for an interior corner;

THENCE S 23°38'48" E a distance of 1713.51 feet to a point for an exterior corner;

THENCE S 65°06'35" W a distance of 2376.81 feet to a point for an exterior corner;

THENCE NORTH a distance of 1462.31 feet to a point in the centerline of said PEACH CREEK;

THENCE along the centerline of said PEACH CREEK the following calls;
S 76°41'05" W a distance of 30.21 feet;
N 63°32'57" W a distance of 163.42 feet;
N 46°50'43" W a distance of 84.23 feet;
N 74°51'18" W a distance of 58.14 feet;
N 88°59'54" W a distance of 32.46 feet;
S 47°08'43" W a distance of 22.61 feet;
S 9°41'54" W a distance of 51.73 feet;
S 48°49'14" W a distance of 98.85 feet;
S 75°13'16" W a distance of 61.47 feet;
S 62°58'50" W a distance of 127.15 feet;
S 75°05'16" W a distance of 48.54 feet;
N 52°38'00" W a distance of 34.46 feet;
N 10°19'56" W a distance of 29.84 feet;
N 51°03'48" W a distance of 101.50 feet;
N 36°22'18" W a distance of 24.07 feet;
N 50°37'21" W a distance of 30.45 feet;
N 79°54'52" W a distance of 122.50 feet;
S 87°52'08" W a distance of 87.46 feet;
N 70°56'08" W a distance of 30.27 feet;
S 63°22'31" W a distance of 36.29 feet; and,
S 54°44'55" W a distance of 62.39 feet to a point for the most westerly southwest corner;

THENCE N 0°08'17" E at a distance of 475.79 feet passing a 1/2" Iron Rod found at the southwest corner of said Called 16.71 acre tract and continuing along the west line of said 16.71 acre tract a total distance of 1203.98 feet to a

1/2" Iron Rod found for an exterior corner, same being the northwest corner of said 16.71 acre tract;

THENCE N 89°38'51" E along the south line of a certain Called 130 acre tract as described in Volume 75, Page 107, a distance of 91.75 feet to a point for an interior corner, same being the most southerly southeast corner of said 130.00 acre tract;

THENCE N 1°53'53" W along the east line of said 130.00 acre tract a distance of 569.21 feet to a point for an interior corner of said Called 130.00 acre tract;

THENCE N 27°51'49" W a distance of 2451.15 feet to a 3/8" Iron Rod found in concrete, same being an easterly interior corner of that certain Called 344 acre tract as described in Volume 105, Page 295;

THENCE N 21°44'40" W a distance of 1390.45 feet to a 3/8" Iron Rod found for an exterior corner, same being the most easterly corner of the William David Smith Called 30.00 acre tract as described in Volume 472, Page 706;

THENCE NORTH a distance of 928.17 feet to a point for the most northerly northwest corner;

THENCE EAST a distance of 1253.16 feet to a point for the most northerly northeast corner;

THENCE SOUTH a distance of 700.00 feet to a point for an interior corner;

THENCE S 27°09'54" E a distance of 1150.85 feet to a 1/2" Iron Rod found for an interior corner, same being the most westerly south corner of that certain Called 49.50 acre tract as described in Volume 206, Page 625, and also being the most northerly corner of said First American Bank Called 3.00 acre tract;

THENCE S 47°23'54" E along the south line of said 49.50 acre tract and the northeast line of said First American Bank tract and the N. M. Greer tract a distance of 421.19 feet to a 1/2" Iron Rod found for an exterior corner, same being the northeast corner of said N. M. Greer tract;

THENCE S 1°40'08" E along the east line of said Greer tract a distance of 415.00 feet to a point for corner;

THENCE S 47°10'08" E a distance of 291.67 feet to a point for corner;

THENCE S 1°40'08" E a distance of 199.25 feet to a point in the Original right-of-way line of State Highway No. 6;

THENCE S 47°59'36" E along said Original right-of-way line a distance of 428.51 feet to a point for corner, same being the southeast corner of a certain Called 5.00 acre tract described as a 4.00 acre tract and a 1.00 acre tract as described in Volume 449, Page 4, and Volume 403, Page 389, respectively;

THENCE N 0°01'18" E a distance of 1131.57 feet to a 1/2" Iron Rod found for corner, same being the northeast corner of said Called 5.00 acre tract;

THENCE N 1°45'42" W along the east line of said Called 49.50 acre tract a distance of 327.30 feet to a 3/8" Iron Rod found for corner;

THENCE EAST a distance of 550.00 feet to a point for corner;

THENCE S 58°20'20" E a distance of 1537.75 feet to a point for corner;

THENCE N 88°53'57" E along the north line of said Robert Becker 24.88 acre tract, and the Robert Becker 24.97 acre tract, a distance of 1020.43 feet to a 1/2" Iron Rod found for corner, same being the northeast corner of said 24.97 acre tract;

THENCE S 89°31'49" E along the north line of said 33.076 acre tract a distance of 543.51 feet to a 1/2" Iron Rod found for a northeast corner, same being the northeast corner of said 33.076 acre tract;

THENCE S 0°28'58" E along a east line of said 33.076 acre tract a distance of 677.59 feet to a 1/2" Iron Rod found for an interior corner;

THENCE N 89°25'58" E along the north line of said 33.076 acre tract a distance of 301.07 feet to a 3/4" Iron Pipe found for the most easterly northeast corner of said 33.076 acre tract, and the northwest corner of said Called 55 acre tract;

THENCE S 86°44'39" E along the north line of said 55 acre tract a distance of 1031.99 feet to the PLACE OF BEGINNING AND CONTAINING AN AREA OF 567.91 ACRES OF LAND MORE OR LESS for the purposes of a well unit, according to a survey prepared during the months of February through July 1993 under the supervision of H. Curtis Strong, Registered Professional Land Surveyor No. 4961.

H.

STATE OF TEXAS
REGISTERED
HORACE CURTIS STRONG
4961
PROFESSIONAL
LAND SURVEYOR

EXHIBIT "C"

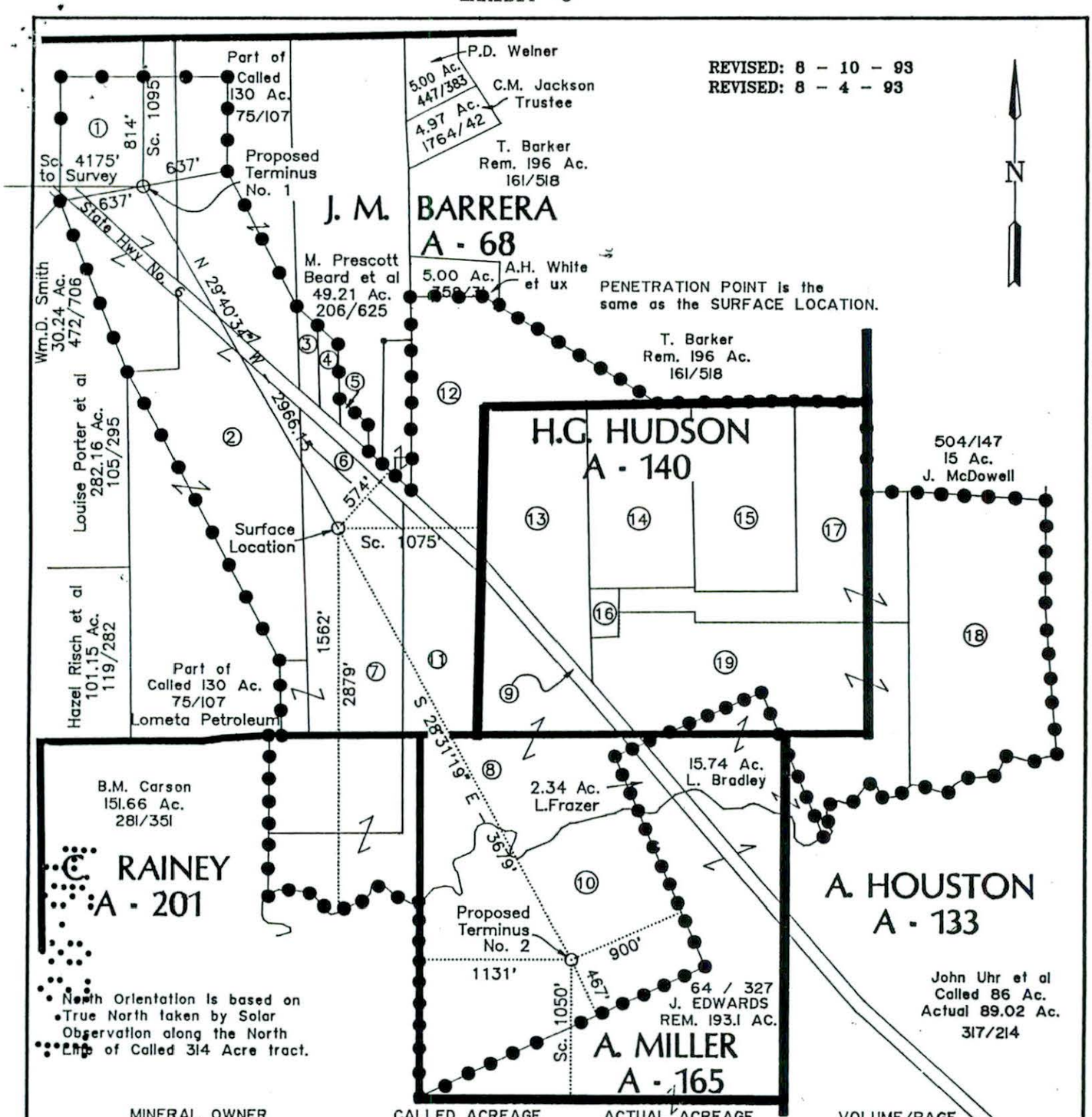

	MINERAL OWNER	CALLED ACREAGE	ACTUAL ACREAGE	VOLUME/PAGE
1	Louise Porter, et al	Part of 314.0 out of 344.0	34.26	105/295
2	Dale Resources	Part of 130.0	65.59	75/107
3	1st American Bank	3.00	2.15	1163/701
4	N.M. Greer et ux	3.00	2.14	304/159
5	Frank Thurman,Jr.et al	1.037	0.97	1057/348 & 994/350
6	W. D. Fitch	2.741	2.61	1010/519
7	Emilio Ayche et al	Part of 60.0	35.47	1163/647
8	Lawrence Fraser	16.71 & Part of 80.31	72.49	856/629 & 959/388
9	STATE OF TEXAS	Part of 47.36 & Res.17.0	13.96	1773/15 & 81/242
10	Jane Edwards	Part of 193.1	66.70	64/327
11	J.B. Daugherty et al	17.0	21.96	151/397 Ref.30/428
12	Est.of Mills P. Walker & D.Mike	5.64 & Part of 196.0	33.62	161/518 Ref.29/525 & 30/432
13	Robert Becker et al	28.10	28.64	292/552
14	Robert Becker et al	25.0	24.88	193/423
15	Robert Becker et al	25.0	24.97	740/765
16	Gus Bradley, Jr. et al	1.81	1.82	452/897
17	Lawrence Bradley et al	33.076	33.076	1329/191
18	Tom Barker et al	55.0	49.88	161/518
19	J.D. Langley et ux	Part of 66.152	52.724	1329/191 Ref.1461/276

TOTAL 567.91 ACRES

I, H. CURTIS STRONG, REGISTERED PROFESSIONAL LAND SURVEYOR NO. 4961, DO HEREBY CERTIFY THAT THE WELL LOCATION AS SHOWN WAS STAKED ON THE GROUND AND IS TRUE AND CORRECT TO THE BEST OF MY KNOWLEDGE.

H. Curtis Strong

H. CURTIS STRONG, R.P.L.S. NO. 4961

STATE OF TEXAS REGISTERED H. CURTIS STRONG 4961 PROFESSIONAL LAND SURVEYOR

DALE RESOURCES, INC.

BARRERA NO. 2

H.G. HUDSON, J.M. BARRERA, A. MILLER, c. RAINEY, & A. HOUSTON SURVEYS
BRAZOS COUNTY, TEXAS

Scale: 1" = 1000' May 11, 1993
PREPARED BY: Garrett Engineering
Bryan , Tx. 77802 Ph. (409) 846 - 2688

16.

File No. MF095380
Pooling Agreement + Unit Designation
Date Filed: 12-8-94
David Dewhurst, Commissioner
By [illegible]

1.59.01

Plugging Report

RAILROAD COMMISSION OF TEXAS
OIL AND GAS DIVISION

FORM W-3
Rev. 12/92

Unit 2349 MF 095228
MF 095380

API NO. 42-041-31752 (If Available)

1. RRC District: 03

FILE IN DUPLICATE WITH DISTRICT OFFICE OF DISTRICT IN WHICH WELL IS LOCATED WITHIN THIRTY DAYS AFTER PLUGGING

4. RRC Lease or ID. Number: 23952

2. FIELD NAME (as per RRC Records): GIDDINGS (AUSTIN CHALK)

3. Lease Name: BARRERA

5. Well Number: 2H

6. OPERATOR: SANDLE OPERATING

6a. Original Form W-1 Field in Name of: ~~ROSEWOOD RESOURCES COMPANY~~ DALE OPERATING COMPANY

10. County: BRAZOS

7. ADDRESS: P.O. BOX 1917, HUNTSVILLE, TEXAS 77342

6b. Any Subsequent W-1's Filed in Name of:

11. Date Drilling Permit Issued: ~~1976~~ 6/17/93

8. Location of Well, Relative to Nearest Lease Boundaries of Lease on which this Well is Located: 485' Feet From EAST Line and 2290' Feet From SOUTH Line of the BARRERA Lease

12. Permit Number: 412947

9a. SECTION, BLOCK, AND SURVEY: J. M. BARRERA SURVEY, A- 68

9b. Distance and Direction From Nearest Town in this County: 3 MILES NORTH OF MILLICAN

13. Date Drilling Commenced: 7/5/1993

16. Type Well (Oil, Gas, Dry): OIL — Total Depth: 14,524'

17. If Multiple Completion List All Field Names and Oil Lease or Gas ID No.'s

	GAS ID or OIL LEASE #	Oil-O Gas-G	Well #

14. Date Drilling Completed: 8/28/1993

18. If Gas, Amt. Of Cond on Hand at time of Plugging:

15. Date Well Plugged: ~~9/22/2021~~ 9/23/21

CEMENTING TO PLUG AND ABANDON DATA:	PLUG #1	PLUG #2	PLUG #3	PLUG #4	PLUG #5	PLUG #6	PLUG #7	PLUG #8
*19. Cementing Date	9/23/21	9/23/21						
20. Size of Hole or Pipe in which Plug Placed (inches)	10 ¾"	10 ¾"						
21. Depth to Bottom of Tubing or Drill Pipe (ft.)	500'	16'						
*22. Sacks of Cement Used (each plug)	55	5						
*23. Slurry Volume Pumped (cu. Ft.)	58.3	5.3						
*24. Calculated Top of Plug (ft.)	400'	6'						
25. Measured Top of Plug (if tagged) (ft.)								
*26. Slurry Wt. #/Gal.	16.4	16.4	16.4	16.4	16.4	16.4	16.4	16.4
27. Type Cement	H	H	H	H	H	H	H	H

28. CASING AND TUBING RECORD AFTER PLUGGING

SIZE	WT.#/FT.	PUT IN WELL (ft.)	LEFT IN WELL (ft.)	HOLE SIZE (in.)
10 ¾"		3,305'	3,299'	14 ¾"
7 5/8"		11,059'	8,109'	9 7/8"

29. Was any Non-Drillable Material (Other Than Casing) Left in This Well: ☒ Yes ☐ No

29a. If answer to above is "Yes" state depth to top of "junk" left in hole and briefly describe non-drillable material. (Use Reverse Side of Form if more space is needed.)

MOD. D PACKER @ 7,847'

30. LIST ALL OPEN HOLE AND/OR PERFORATED INTERVALS

FROM 11,277'	TO 14,165'	FROM	TO
FROM	TO	FROM	TO
FROM	TO	FROM	TO
FROM	TO	FROM	TO
FROM	TO	FROM	TO

RECEIVED
RRC OF TEXAS
NOV 08 2021
OG
HOUSTON, TX

I have knowledge that the cementing operations, as reflected by the information found on this form, were performed as indicated by such information.

• Designates items to be completed by Cementing Company. Items not so designated shall be completed by Operator.

Signature of Cementer or Authorized Representative

AXIS ENERGY SERVICES
Name of Cementing Company

CERTIFICATE:
I declare under penalties prescribed in Sec. 91.143, Texas Natural Resources Code, that I am authorized to make this report, that this report was prepared by me or under my supervision and direction, and that data and facts stated therein are true, correct, and complete, to the best of my knowledge.

REPRESENTATIVE OF COMPANY — PRODUCTION FOREMAN (TITLE) — 11-5-21 (DATE) — Phone 936-291-1002 (A/C NUMBER)

claire zolkoski 11/10/2021
SIGNATURE: REPRESENTATIVE OF RAILROAD COMMISSION

RECEIVED
RRC OF TEXAS
NOV 16 2021
OIL & GAS FIELD OPERATIONS
AUSTIN, TX

31. Was Well filled with Mud-Laden Fluid, According to the regulations of the Railroad Commission	☒ Yes ☐ No	32. How was Mud Applied? Pumped thru tbg.
33. Mud Weight	9.5 LBS/GAL	

34. Total Depth 14,524'	Other Fresh Water Zones by T.D.W.R. TOP	BOTTOM	35. Have all Abandoned Wells on this Lease been Plugged according to RRC Rules? ☐ Yes ☐ No
Depth of Deepest Fresh Water 2875'	0	450	36. If NO, Explain
	1375	1600	
	2625	2875	

37. Name and Address of Cementing or Service company who mixed and pumped cement in this well
AXIS ENERGY SERVICES 4007 US 77 S. VICTORIA, TEXAS 77905

Date RRC District Office notified of plugging 9/9/2021

38. Name(s) and Address(es) of Surface Owners of Well Site

MUSEUM OF THE AMERICAN GI
19124 HWY 6 SOUTH
COLLEGE STATION, TX 77845

39. Was Notice Given Before Plugging to the Above? YES

FILL IN BELOW FOR DRY HOLES ONLY

40. For Dry Holes, this Form must be accompanied by either a Driller's, Electric, Radioactivity or Acoustical/Sonic Log or such Log must be released to a Commercial Log Service.

☐ Log Attached ☐ Log released to _____ Date _____

Type Logs:

☐ Driller's ☐ Electric ☐ Radioactivity ☐ Acoustical/Sonic

41. Date FORM P-8 (Special Clearance) Filed?

42. Amount of Oil produced prior to Plugging _____ bbls*

* File FORM P-1 (Oil Production Report) for month this oil was produced

RRC USE ONLY

Nearest Field _____

RRC JOB # 270487
9/13/2021 CIBP WAS SET @ 11,000'
9/17/2021 7 5/8" WAS PERF'D @ 6,800', SQZ'D OUT 25 SACKS OF CMT OUT OF PERFORATIONS. LEFT 45 SACKS IN 7-5/8" CSG.
9/17/2021 PERF. 7 5/8" CASING @ 3,355'
9/17/2021 7 5/8" CASING WAS CUT AND PULLED FROM 2,925'
9/21/2021 PLUG #5 WAS RE-SET AFTER PLUG #4 WAS TAGGED AT 3,005'
CUT & CAP WELL 6" BELOW GROUND LEVEL.

RRC ONLINE SYSTEM

Production Reports

PR Queries Home New Lease ID's Built Query

Query Results Production by Lease

Current Operator: SANDEL OPERATING COMPANY (747534)
Field: GIDDINGS (AUSTIN CHALK-3)
Lease: BARRERA
Prod Month Range: Jan 2014 - Mar 2022

District: 03
RRC Identifier: 23952
Gas Well #:
Lease Type: Oil

Return

Showing: 73 - 84 of **99** results

Oil/Condensate (Whole Barrels)							Gas/Casinghead Gas - MCF		
Prod Month	Commingle Permit No.	On Hand Beginning of Month	Production	Disposition		On Hand End of Month	Formation Production	Disposition	
				Volume	Code			Volume	Code
01/2020		100	0			100	0		
02/2020		100	0			100	0		
03/2020		100	0			100	0		
04/2020		100	0			100	0		
05/2020		100	0			100	0		
06/2020		100	0			100	0		
07/2020		100	0			100	0		
08/2020		100	0			100	0		
09/2020		100	0	47	01	53	0		
10/2020		53	0	53	71	0	0		
11/2020		0	0			0	0		
12/2020		0	0			0	0		

Return

[< Previous] [Next >] | Page: 1 2 3 4 5 6 **7** 8 9 of 9

Lease Comments

none

Disclaimer | RRC Online Home | RRC Home | Contact

RRC ONLINE SYSTEM

Production Reports

PR Queries Home New Lease ID's Built Query

Query Results Production by Lease

Current Operator:	**ROSEWOOD RESOURCES, INC. (728874)**	District:	**03**
Field:	**GIDDINGS (AUSTIN CHALK, GAS)**	**RRC Identifier:**	**146859**
Lease:	**BARRERA**	**Gas Well #:**	**2**
Prod Month Range:	**Jan 1993 - Mar 2022**	**Lease Type:**	**Gas**

Return

Showing: 97 - 108 of **351** results

Oil/Condensate (Whole Barrels)							Gas/Casinghead Gas - MCF		
Prod Month	Commingle Permit No.	On Hand Beginning of Month	Production	Disposition Volume	Disposition Code	On Hand End of Month	Formation Production	Disposition Volume	Disposition Code
01/2001		175	591	545	01	218	5,840	5,179	02
				3	08			11	05
								650	09
02/2001		218	480	542	01	154	5,087	4,559	02
				2	08			528	09
03/2001		154	0	154	01	0	0		
04/2001		NOT ON SCHEDULE							
05/2001		NOT ON SCHEDULE							
06/2001		NOT ON SCHEDULE							
07/2001		NOT ON SCHEDULE							
08/2001		NOT ON SCHEDULE							
09/2001		NOT ON SCHEDULE							
10/2001		NOT ON SCHEDULE							
11/2001		NOT ON SCHEDULE							
12/2001		NOT ON SCHEDULE							

Return

[< Previous] [Next >] | Page: 4 5 6 7 8 **9** 10 11 12 13 of 30

Lease Comments

none

Disclaimer | RRC Online Home | RRC Home | Contact

File No. MF 095380

Unit 2349 Termination County

Date Filed: 4/12/22

George P. Bush, Commissioner

By SSD